the digital group
po box 6528 denver, colorado 80206 (303) 777-7133

The Digital Group
Floppy Disk Power Supply

Part #570-001

Regulated & Filtered

+24V DC @ 2 amps

+5V DC @ .8 amps

Enough power for two drives

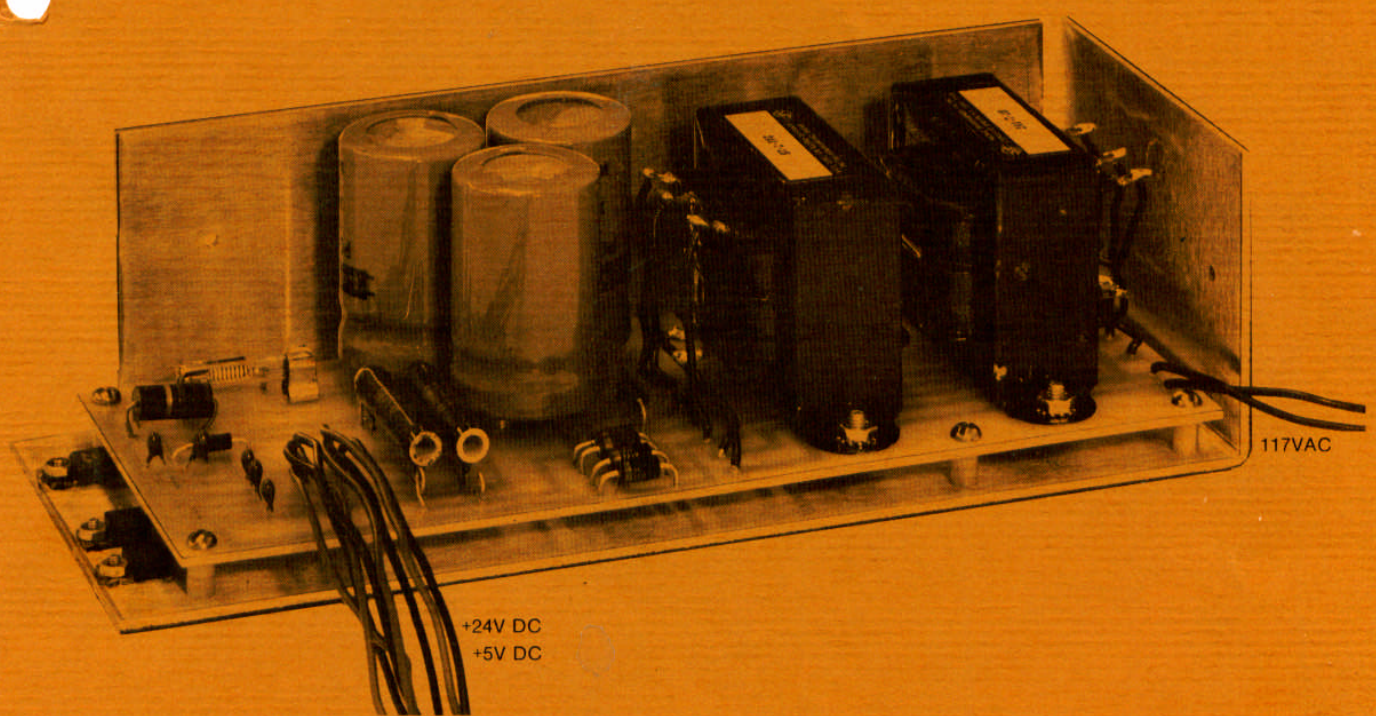

298-076

GENERAL DESCRIPTION

This power supply provides regulated and filtered DC supply voltages (+24@2 amps & +5 @ .8 amps) for the disc drives. One supply is needed for every two drives.

CIRCUIT OPERATION +24V DC (OUT 1)

Two transformers (T1,T2) in parallel create a 4 amp 28V center tapped AC source. This 28V AC is applied to a full wave bridge rectifier (D1-D4) with the output voltage filtered (C1,C2,C9). The resulting DC voltage output is fed through a series regulator (R1,Q1,21) and fused by F1. The voltage output should be in the range of 24-26V. C4 and D5 provide "spike" suppression and filtering for a load assumed to be inductive. D5 specifically prevents the output from swinging to negative transient voltages.

CIRCUIT OPERATION +5V DC (OUT 2, OUT 3)

A 14V AC source is taken off the center tap lead of the two transformers and single wave rectified via D6. Capacitor C3 filters the resulting DC voltage. Two identical 5V regulated circuits, 1. (R2,Q2,C5,C6); and 2. (R3,Q3,C7,C8) take the voltage from C3 and output +5V DC. R2 and R3 drop the voltage from C3 and decrease the heat dissipation of Q2 and Q3 respectively. C5,6,7,8 provide filtering and stabilization for the output of Q2 or Q3.

NOTE: These 5V outputs should **NOT** be connected together under any circumstances!

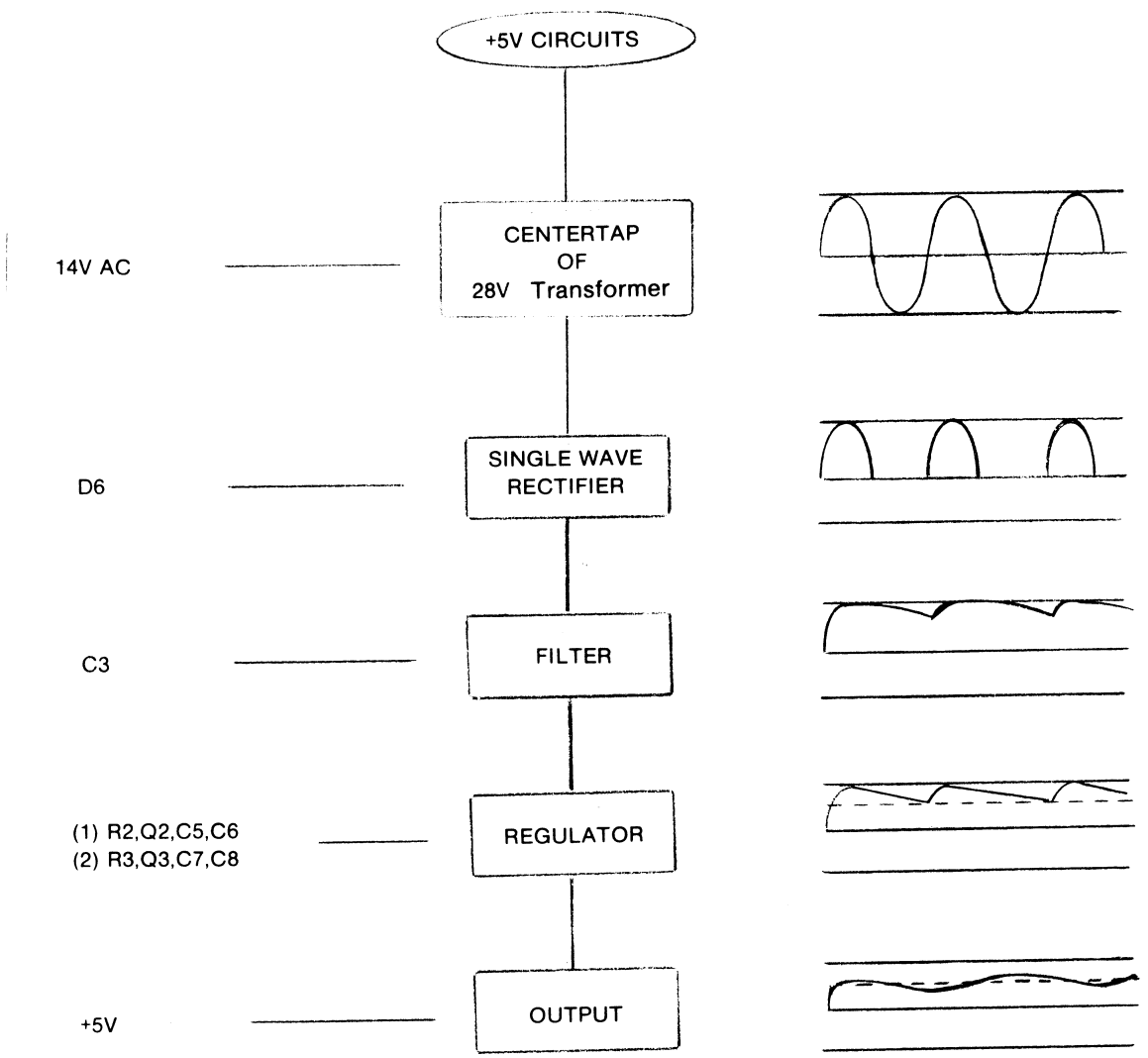

FLOW CHART FOR 24V CIRCUIT

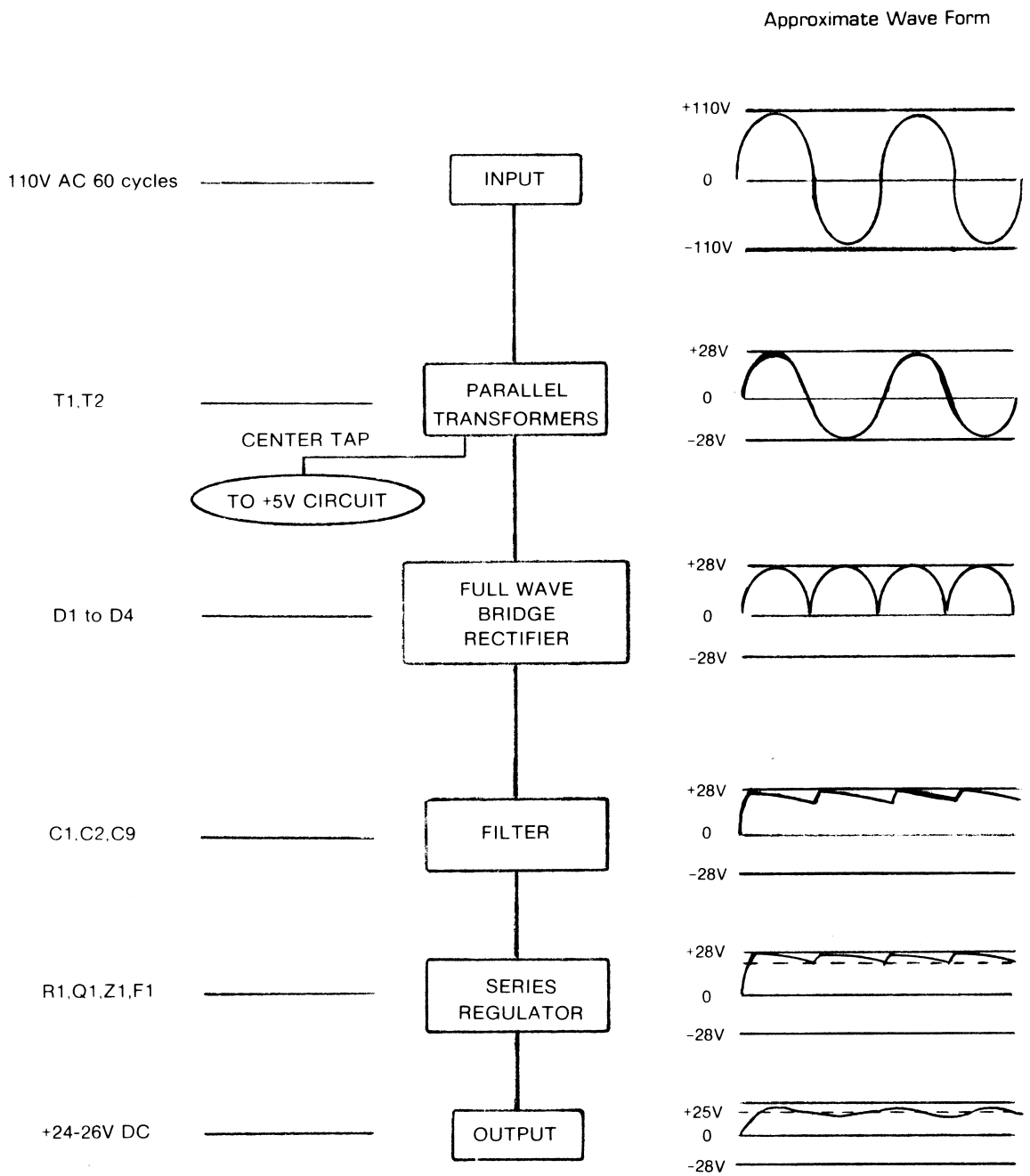

ASSEMBLY INSTRUCTION FOR THE FLOPPY DISC POWER SUPPLY

You will be inserting components from the blank side of the board and soldering the leads to the trace side of the board.

- ☑ As you look at the blank side of the board, orient the board to match the Parts Placement Diagram. There should be two 3/16" holes and seven 1/16" holes in a row on the left edge of the board.
- ☑ Insert the rightside fuse clip with the partially closed end to the right. Insert the matching leftside clip with the partially closed end to the left. Invert the board and solder.
- ☑ Form the leads on one of the ~~LM-340-5~~ MR 521 diodes so that they match the appropriate holes just below the fuse clips. Orient the diode so that the cathode stripe is on the right and insert so that the body of the diode is about ⅛" off the surface of the board. Invert the board and solder.
- ☑ Form the leads for D-1,2-3,4 & 6. Insert them with the cathode stripes on the right. Keep the diodes about ⅛" off the board. Invert the board and solder.
- ☑ Similarly insert and solder the smaller Zener diode (Z1) with cathode stripe to the right.
- ☑ Insert the 1watt resistor (R1). The orientation is not important.
- ☑ The six 1-mfd caps all must be inserted with proper orientation. The longer lead is marked positive. Follow the Parts Placement Diagram for the orientation. C4 +Right; C5 +Down; C6 +UP; C7 +Down; C8 +Left; C9 +Right. Double check and solder.
- ☑ The 12 watt resistors (R2 and R3) will get hot so it is necessary to keep the body of the resistor about ¼" off the board. (Orientation is not important.)
- ☐ Bolt the two transformers in place. (The terminals face away from each other.) Push the four 8-32 x ⅜" bolts up through the board and feet of the transformer. Use the star washer/nuts to secure in place.

The primary terminals are the two on the bottom of the transformers and the secondary terminals are the three on top.

- ☑ From the 60" length of black #18 gauge wire, cut two 1" lengths. Strip ⅛" from one end of both wires and ¼" from the other end. Tin both ends. Connect the AC line and the closest primary terminal (T1-1). Connect T1-2 to AC return. (Crimp the ¼" bare end over the terminal for added strength.)
- ☑ Cut two 2" lengths of the same wire. Strip ¼" insulation from one end of each wire and ⅛" from the other end. Tin and use to connect T2-1 and T2-2 to T2 primary.
- ☑ Cut three 2 ½" lengths from the same wire. Strip and tin and use to connect T1-3, T1-4, and T1-5 to the T1 secondary. (Do not cross the wires.)
- ☑ Cut three 2 ⅝" lengths from the same wire. Strip ¼" from one end and ⅛" from the other end of the three wires. Tin and use to connect T2-3, T2-4, and T2-5 to the remaining secondary terminals.
- ☑ Cut the remaining wire into two equal pieces. Strip and tin the ends and insert into the AC line and AC return. Invert and solder.
- ☑ Unscrew the screws and lock washers from the 2900 mfd caps. Attach the caps by bringing the screws and washers up through the board. Orientation is critical. Double check the polarity reference on the plated side of the board.
- ☑ Attach the three regulators Q1,Q2,Q3. These three regulators are inserted from the trace side of the board. The top of the regulators (numbers and words) should face the end of the board. Push the leads in just far enough to barely feel the tips protruding through the board and solder. Double check the part numbers. Q1 is an RCA 120; Q2 and Q3 are LM 340-5. Bend the regulators out over the end of the board with the radius of the bend sufficient to clear the traces
- ☑ Insert and solder the black wires from the two single-wire connector cable assemblies and the two 3-wire connector cable assemblies to **any** of the output voltage holes marked ground. Solder the two red wires from the 3-wire cable assembly to OUT 2 and OUT 3.
- ☑ Solder one red and white wire to each OUT 1.
- ☑ Place the flat side of the chassis on your table with six 8-32 x ¾" bolts coming up through the holes. Place the ⅜" teflon spacers over each bolt. Set the power supply down over the screws and secure in place with six 8-32 hex nuts.
- ☐ Coat the flat side of the regulators with silicon grease and gently align the regulators with their holes. Use the three 4-40 x ⅜" bolts/nuts with compression washers to secure the regulators. The bolt comes up through the chassis and the flat side of the compression washer goes against the underside of the chassis. The RCA 120 has an additional mica insulator between it and the chassis and a nylon bushing between regulator and nut (See Dia. # 1). Snug the nut down and then give 1/4 turn only. This will create the needed contact without smashing the washer. Put in the 2 amp Slo-Blo fuse.
- ☐ Plug the power supply into a fused AC source and check the voltages. If they check out, plug the supply into the drives.

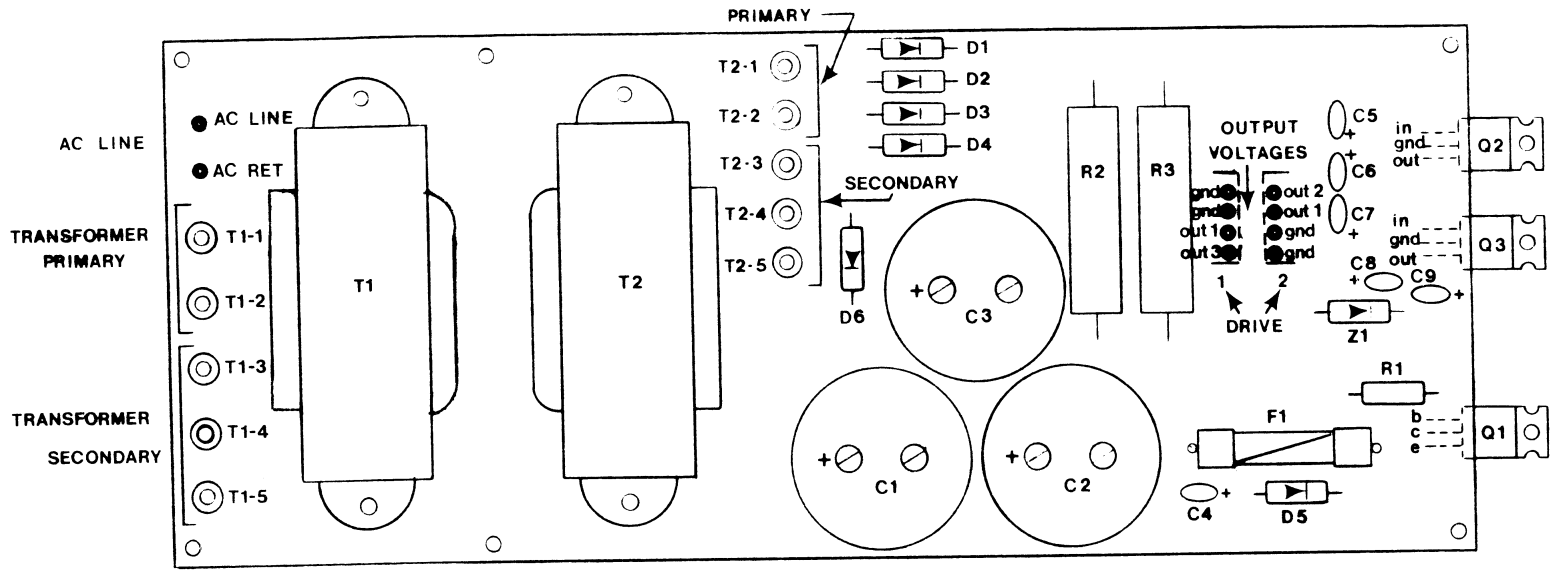

☐	CHASSIS	Chassis Heatsink	1	130-002
☐	PCB	Printed Circuit Board	1	090-036
☐	T1,T2	Transformer	2	855-004
☐	C1,C2,C3	2900 mfd Capacitor 50V	3	012-010
☐	C4-C9	1 mfd tantalum Capacitor 35V	6	010-001
☐	D1-D6	MR501 Diode	6	040-014
☐	Z1	IN5361 Diode, 24V	1	040-017
☐	R1	1.5K ohm 1W Resistor	1	003-006
☐	R2-R3	10 ohm 12w Resistor	2	007-001
☐	Q1	RCA 120 Transistor	1	026-001
☐	Q2,Q3	LM 340-5V Regulator	2	070-003
☐	F1	2A Slo-Blo Fuse	1	123-008

☐	Fuse Clips	2	190-010
☐	Mica Insulator	1	131-000
☐	Compression Washer	3	131-001
☐	Nylon Bushing	1	131-002
☐	Spacer 3/8" x 8-32	6	228-659
☐	8-32 x 3/4" RH Machine Screw	6	228-022
☐	8-32 x 3/8" RH Machine Screw	4	228-003
☐	4-40 - 3/8" RH Machine Screw	3	220-009
☐	8-32 Nut	10	228-251
☐	4-40 Nut	3	228-252
☐	8-32 Star Washer	4	228-462
☐	60" 18# Black wire	1	110-020
☐	3-Wire AC Drive Connector Assm.	2	560-004
☐	Single Wire DC Connector Assm.	2	560-042
☐	Silicon Grease Capsule	1	230-023

PARTS LAYOUT
PARTS LIST

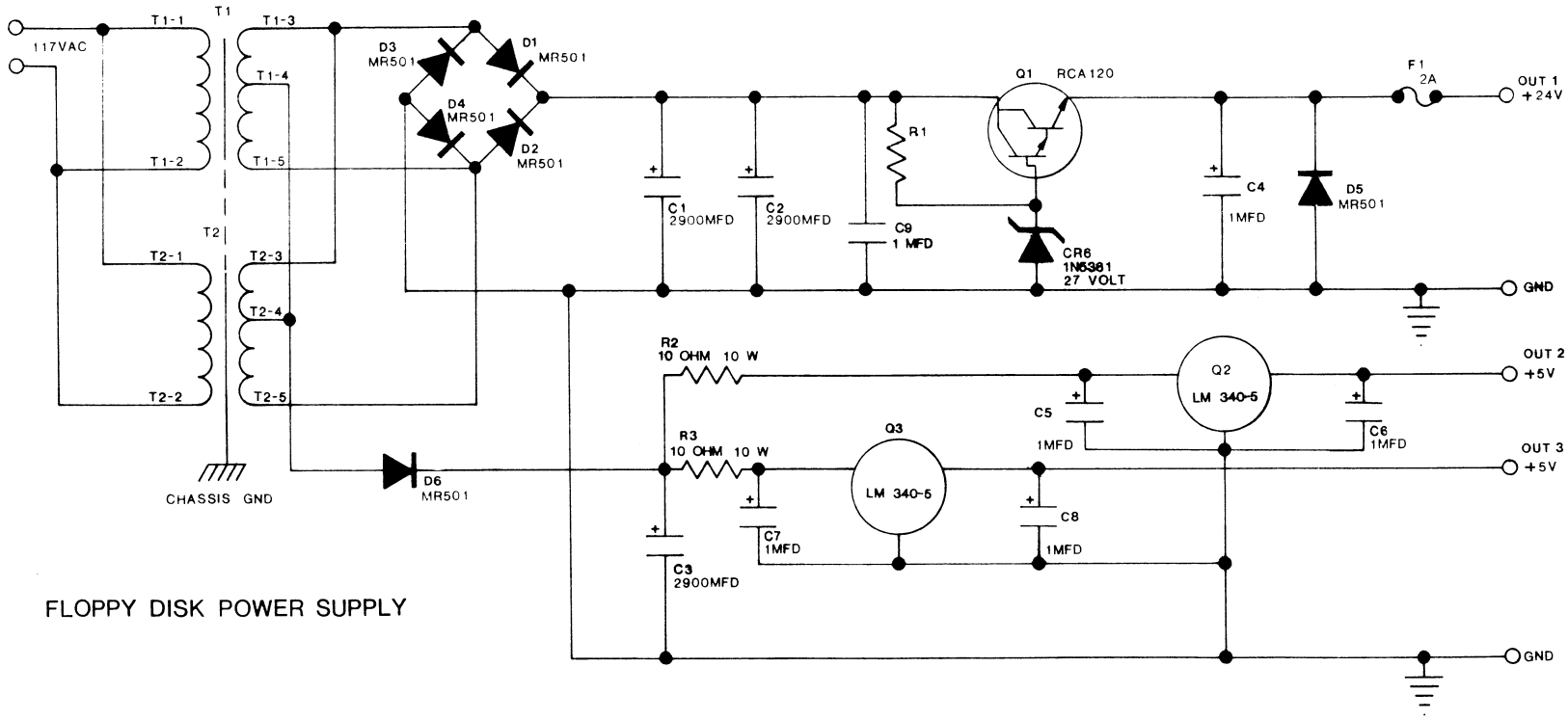

FLOPPY DISK POWER SUPPLY

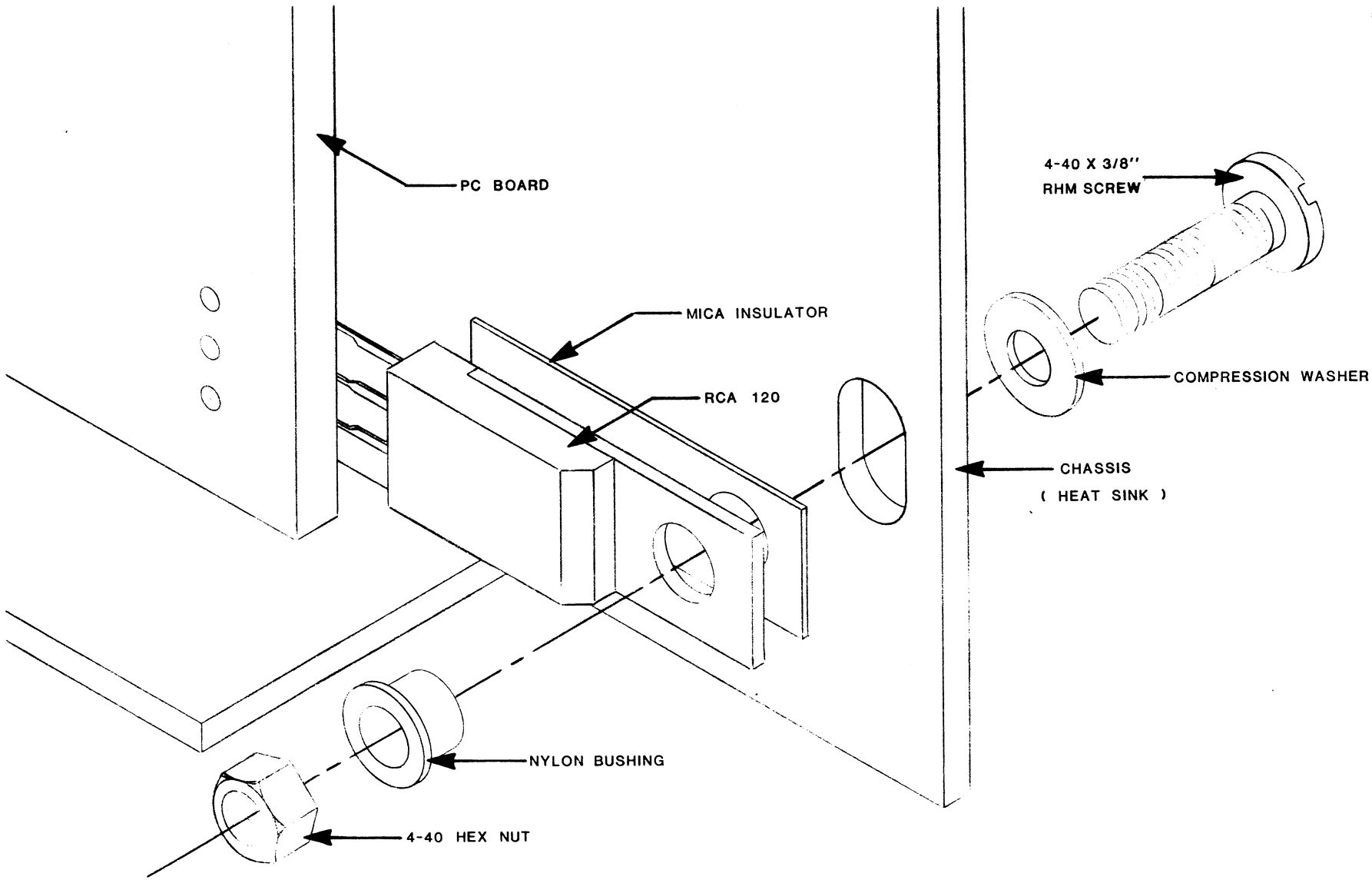

MOUNTING RCA 120 TO CHASSIS

Floppy Disk Power Supply

General Description

The Floppy Disk Power Supply provides regulated and filtered DC supply voltages for the disk drives. One power supply is needed for every two drives in a system. The power supply provides +24V DC @ 2 amps (connection point OUT 1 on the parts placement and schematic diagrams) and two +5V DC sources @ .8 amp each (OUT 2 and OUT 3). A wire from OUT 3 (+5V) is connected to one drive in a system with a wire from OUT 2 (+5V) connected to a second drive. The +5V supplies are separate and should not be connected together or used to power more than one drive. As labeled on the parts placement diagram, wires from the four vertical pads on the left can be used for Drive #1 and wires from the four vertical pads on the right should be connected to a second drive, Drive #2, in a system.

110V AC connections are made to the transformer primary lugs of T1 and to each drive with an AC drive connector on the rear panel of each drive. The line cord (hot wire) should be fused (2 amp) and the power supply chassis grounded as shown in Figures 10 and 11. (Figures are provided for both Innovex and Shugart drives.) The AC line cord, fuse, fan, and switch are supplied with the floppy drive cabinet.

Technical Description

Circuit Operation [24V DC, output at OUT 1 (V1)]

The Floppy Drive Power Supply uses two transformers, T1 and T2, in parallel to create a 4 amp, 28V center-tapped AC source. 28V AC is applied to the full wave bridge rectifier consisting of D1 - D4 with the output voltage filtered by C1, C2, and C9. The resulting DC voltage is fed through the series regulator of R1, Q1, and Z1 with its output fused by F1. The voltage output at OUT 1 (V1) should be in the range of 24 to 26 volts. C4 and D5 provide "spike" suppression and filtering for a load assumed to be inductive. D5 specifically prevents the output from swinging to negative transient voltages.

Circuit Operation [Two +5V DC outputs, .8 amp each at OUT 2 and OUT 3]

A 14V AC source is taken off the centertap lead of the two transformers, T1 and T2, and single wave rectified via D6. Capacitor C3 filters the resulting DC voltage. Two identical 5V regulator circuits, one consisting of R2, Q2, C5, and C6, the other of R3, Q3, C7, and C8, take the voltage from C3 and output +5V DC. R2 and R3 drop the voltage from C3 and decrease heat dissipation of Q2 and Q3, respectively. C5 and C6 provide filtering and stabilize the regulated output of Q2. C7 and C8 filter and stabilize the output of Q3.

The two regulated outputs of +5V will provide a current of up to .8 amp each. The output of each circuit, OUT 2 and OUT 3, should not be connected together under any circumstances.

Power Supply Hook-up

The power supply is designed to provide three outputs with a common ground; +24V DC, 2 amp output at OUT 1, +5V DC at OUT 2 and OUT 3. The +24V DC source will range from 22 to 26 volts depending on its load. It is fused to prevent short circuit problems. The two outputs should not be tied together. A typical application and hook-up is shown below.

AC AND DC WIRING DIAGRAM

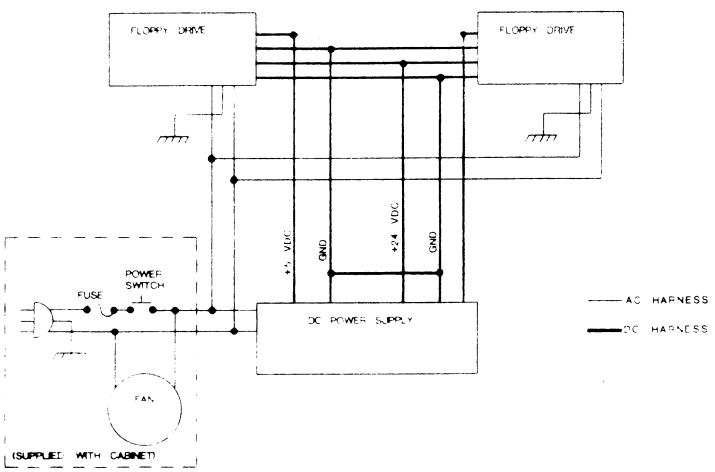

Figures are provided for connecting the power supply to Innovex and Shugart drives. To connect power to the disk system, hook up the appropriate wiring harnesses from the power supply to the disk drive (AC power) and to the corresponding connectors on each drive for DC voltages (+5V, +24V, GND). These connections are detailed in Figures 10, 11, 12, and 13 for Shugart and Innovex drives. Be sure that +24V and +5V are connected correctly to avoid damaging the drive. The vertical row of four pads on the left can be connected to one drive in a system. The vertical row of four pads on the right can be connected to a second drive. The 18" wires supplied with the power supply should be used for making the DC connections.

To make AC power connections to each of the drives and to the Floppy Disk Power Supply, it is necessary to hook up 110V AC to the transformer primary lugs as shown in Figures 10 and 11. The ground wire of the line cord and the ground wire of each AC drive connector should be connected with a grounding screw (chassis mounting screws) to the power supply chassis.

AC WIRING TO POWER SUPPLY AND FLOPPY DISK DRIVES
FIGURE 10

SHUGART

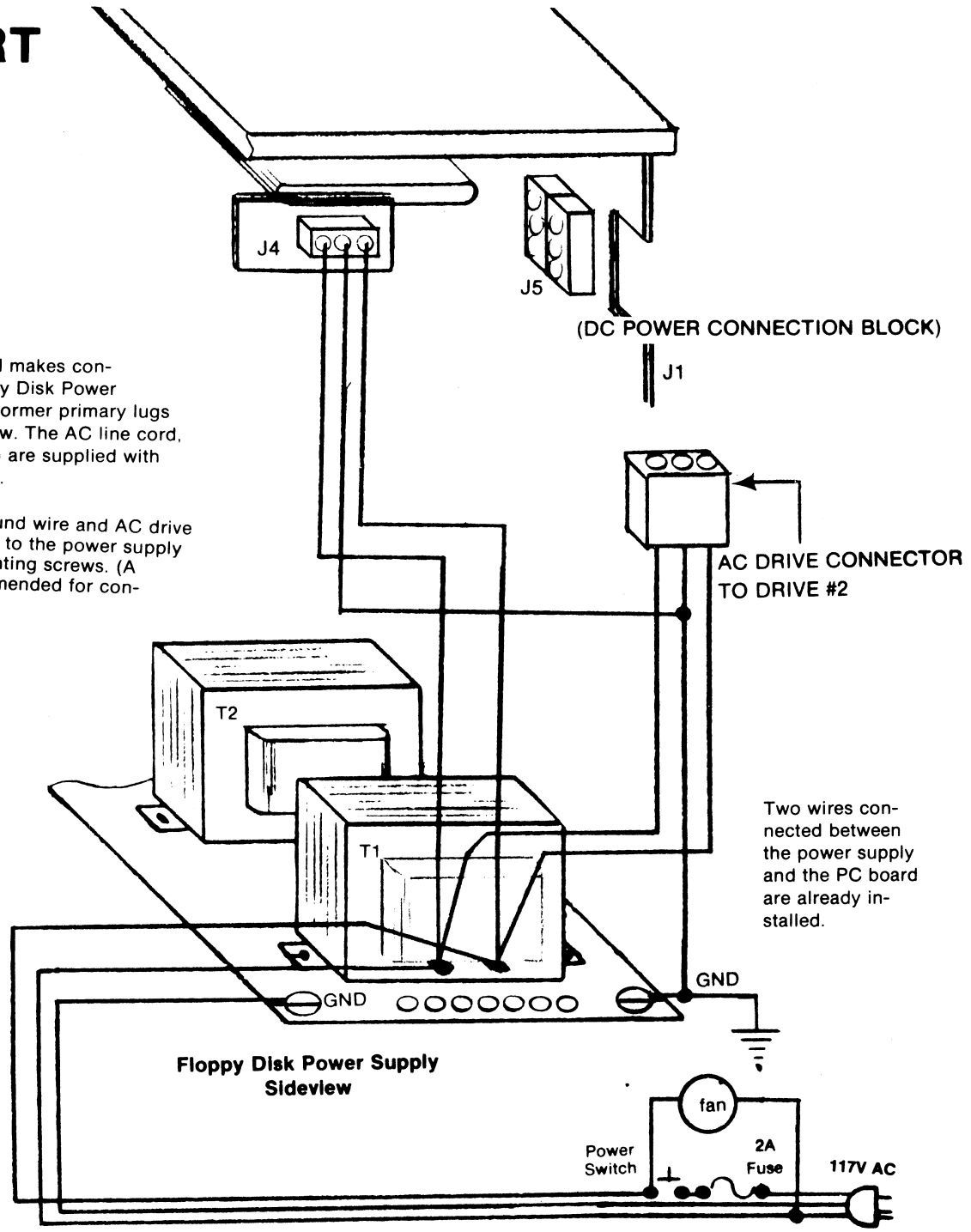

Note: Fuse, line cord makes connection to the Floppy Disk Power Supply on the transformer primary lugs of T1 as shown below. The AC line cord, fuse, fan, and switch are supplied with Floppy Disk Cabinet.

Connect line cord ground wire and AC drive connector ground wire to the power supply chassis at corner mounting screws. (A crimp-on lug is recommended for connections.)

Two wires connected between the power supply and the PC board are already installed.

AC WIRING TO POWER SUPPLY AND FLOPPY DISK DRIVES

FIGURE 11

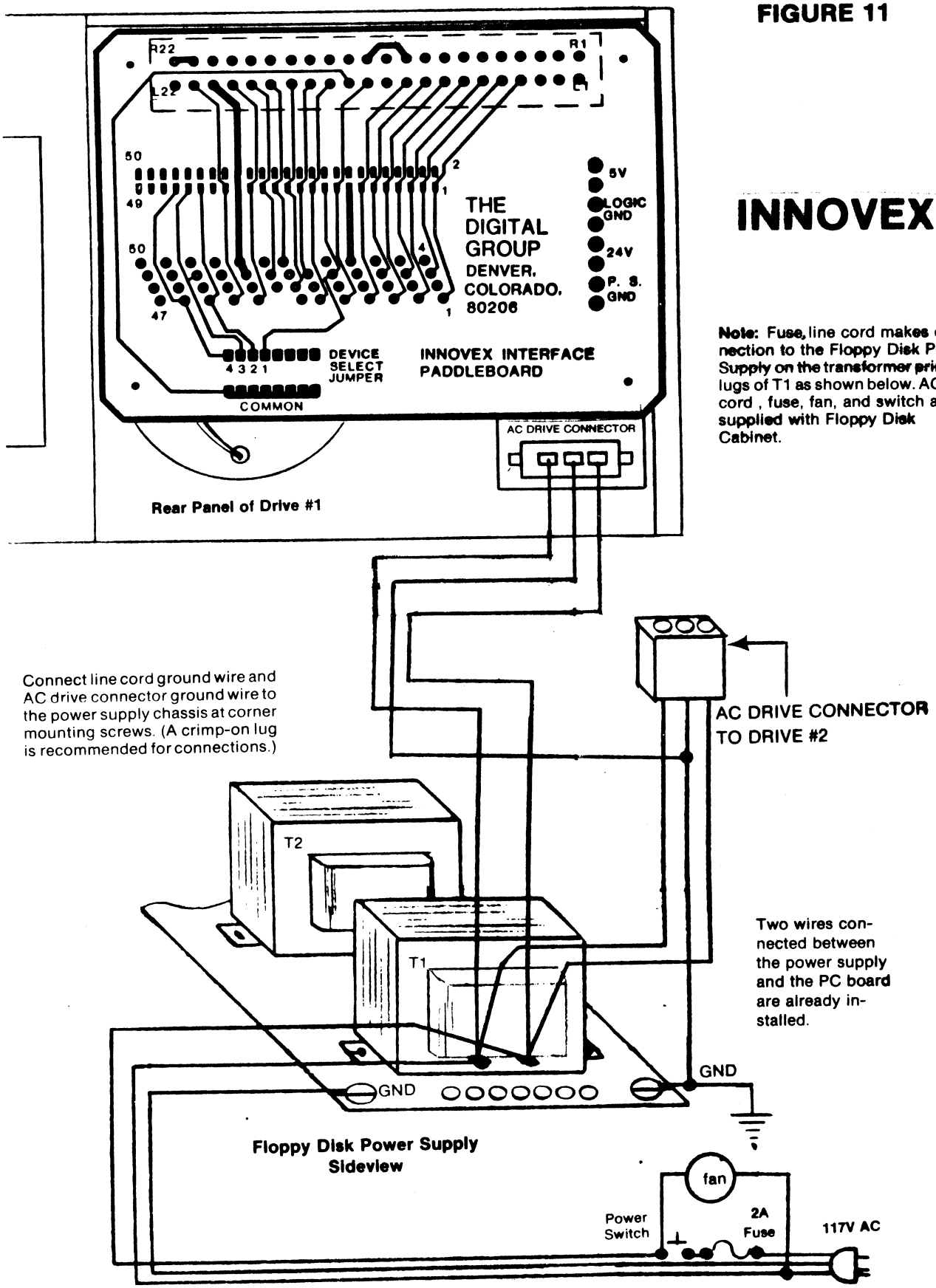

INNOVEX

Note: Fuse, line cord makes connection to the Floppy Disk Power Supply on the transformer primary lugs of T1 as shown below. AC line cord , fuse, fan, and switch are supplied with Floppy Disk Cabinet.

DC POWER SUPPLY TO DRIVE
FIGURE 12

SHUGART

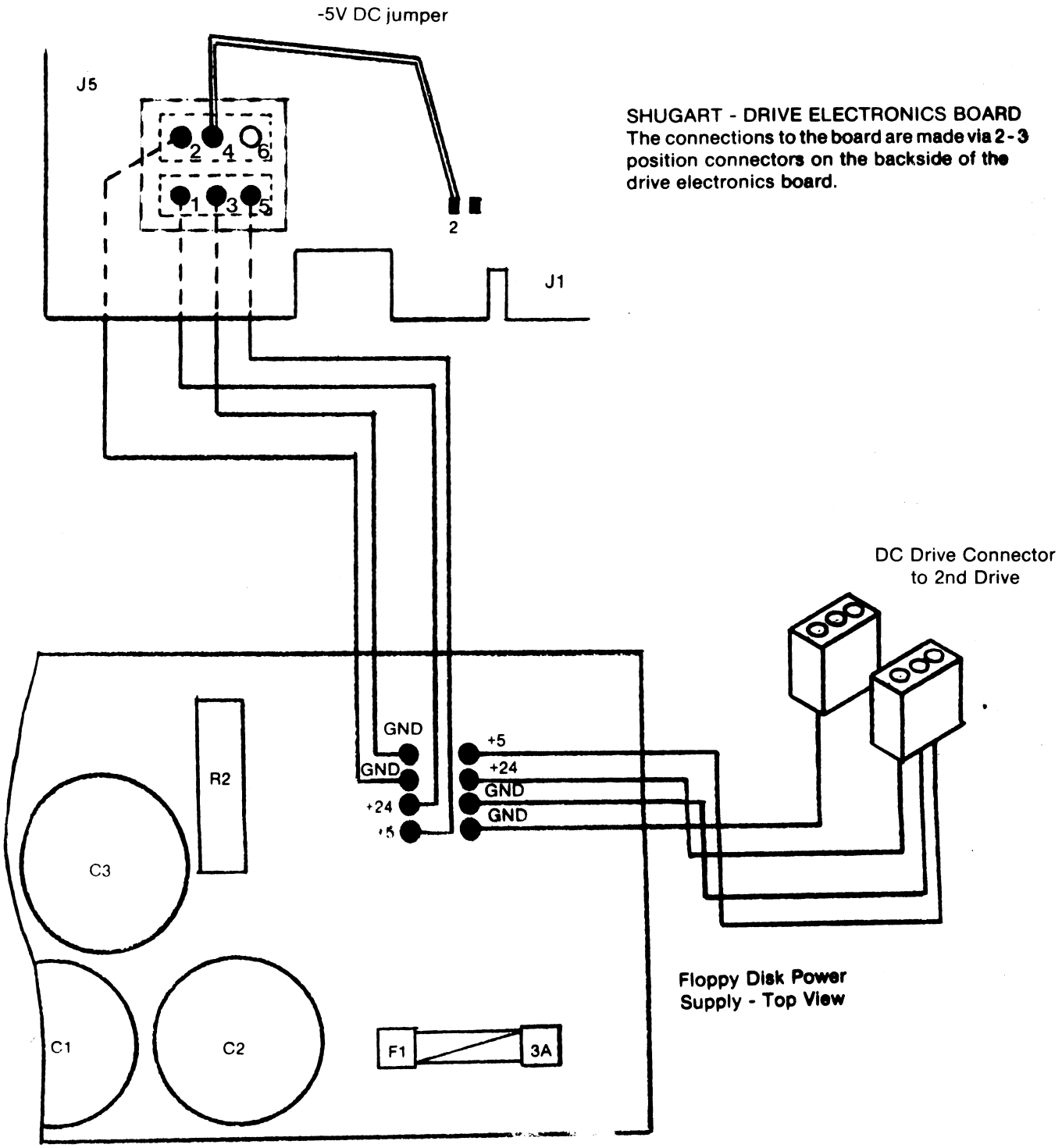

INNOVEX

DC POWER SUPPLY TO DRIVE INTERFACE PADDLECARD

FIGURE 13