PRACTICAL
AUTOMATION
INC.

Trap Falls Road,
Shelton, Connecticut 06484
Telephone (203) 929-5381
Telex 96-4217

0069 M22

4459 E054

INSTRUCTION MANUAL

DMTP-6 ALPHA-NUMERIC PRINTER

INSTRUCTION MANUAL

CONTENTS

1. General Description:

The DMTP-6 series Dot Matrix serial impact printers are avaiable in 3 standard widths, 3 7/16", 6" or 8 1/2" paper roll handling capability. They employ the Patented P.A. DM 101 needle print head (Bulletin #910) and are designed to print in left justified format. Character formations include the entire ASCII set (less underline) in a 7 high (.110") typically 5 wide matrix. Printing on 3 7/16" roll paper renders a maximum printable line length of 3" or 30 characters at a pitch of 10 characters per inch (refer to line rate versus character pitch curves). Printing can be accomplished with a ribbon or directly on pressure sensitive paper.

2. Unpacking and Inspection:

Printers are packaged in cartons filled with resilient placement foam in such a fashion as dictated by what is considered best commercial practice. Check for possible shipping damage, the carrier assumes responsibility.

Shipped with each basic printer is a mating connector extending from the rear of the printer, and a print sample.

NOTE: Prior to operating the unit remove from the printer the head securing styrofoam block, so tagged for shipping purposes only. This can be accomplished by simply removing the tag and pulling down on the exposed portion of foam.

3. Functional Description and Operating Sequence (Typical for 3 7/16" roll printer with ratchet advance)

Internally mounted to a standard printer frame, is a photocell which detects the head-home position and simultaneously establishes your margin for the start of a print line, a bi-directional synchronous motor for traversing the head at 10" per second, a paper feed solenoid for advancing paper, and the Print Head. (Optional ribbon mechanism with Motor).

Typical sequence of operation (See Fig. 1).

Upon application of power, drive the head in the direction of the photocell by grounding the reverse motor winding, sustain this condition for an additional 15 millisecs after receipt of the photocell signal indicating the heads arrival at the home position. The additional 15 millisecs of drive assures proper head and motor positioning in anticipation of the next line to be printed. An alternate method of initializing the proper head position is to drive the head forward for 100 millisecs and then proceed as described above. The initiation of a print cycle begins with the grounding of the forward motor winding. The activation of the head solenoids should commence upon the arrival of the photocell signal approximately 30 millisecs later,

this start-up allows the motor to attain synchronous speed (300 RPM,10"/sec) and establishes the print margin. External electronic controls and timing generate the character patterns and activate the needle solenoids as the head moves laterally over the ribbon and paper impacting it against the metal platen. Upon completion of printing the line (maximum length of 3") the forward winding is lifted from ground (floating) and the reverse winding grounded after a 25 millisec delay. This condition is sustained for an additional 15 millisecs after receipt of the photocell signal indicating again the heads arrival to the home position. A line feed signal of approximately 20 millisecs duration should be initiated during the motor reversal time. An additional 25 millisecs delay should be allowed prior to energizing the forward winding for the next line of print. This insures that both motor windings are not energized simultaneously and that the motor is mechanically at rest.

For ratchet advance units additional line feeds should be restricted to a 10 per cent duty cycle and not allowed during a print cycle. Catastrophic failure of the feed solenoid can result from exceeding either 20 millisecs drive duration or 10% duty cycle limitations.

4. DMTP-6 Specification

Electrical & Mechanical: (Typical of 3 7/16" tape printer)

PRINTING TECHNIQUE:	Impact, dot-matrix
FORMAT:	7 dot vertical by 5 horizontal recommended
CHARACTER SIZE:	.110" Height x .100" Width Typical
*LINE CAPACITY:	30 Character @ 10/in.
CHARACTER PITCH:	Variable
*LINE PITCH:	6 per in. (Standard ratchet advance)
PRINTING SPEED:	100 characters per second @ 10/in.
HEAD TRAVERSE:	9.6 in. sec. 60 Hz, approx. 8 in. sec. 50 Hz
*LINE SPEED: (see Fig. 2)	2.3 line per second (78 per minute) for 30-column line 2 lines per second for 18-column line 3 lines per second for 10-column line. Derate by factor of .833 for 50 Hz
POWER REQUIREMENTS:	(a) Head: 36 VDC ± 5%, 7A peak (b) Needle solenoid pulsing .6A average for ASCII (c) Paper feed solenoid: 36 VDC (±3V) 20 millisec (d) Head motor: 28 VAC at 400 ma (e) Photo electric head position sensor: 5V (f) Ribbon mech motor: 28 VAC @ 125 ma
DIMENSIONS:	3" Height x 6.6" Width x 8.6" Depth (without paper roll) See Fig. 3 for dimensions of 6", 8 1/2" printers
INKING:	Inked ribbon, or pressure sensitive paper
PAPER:	TYPE: 3 7/16", 6", 8 1/2" roll
TEMPERATURE:	0 to +50° C

* Varies with model no. and options refer to appropriate figure.

WEIGHT:	3 7/16" - 4 lbs. 15 oz. approx. 6" - 5 lbs. 6 oz. " 8 1/2" - 8 lbs. 10 oz. "
PLANES OF MOUNTING:	360^{0} front to back 15^{0} side to side

5. PRINT HEAD ELECTRICAL CONSIDERATIONS:

Solenoid coil resistance--16 ohms per coil, inductance--10 mh.

Operating Voltage--25 to 50 VDC. (36 VDC Typical @ 625 microsecond on time)

Operating Current--Current limit at 1 amp per solenoid.

Solenoid Characteristics:

A: Recommended drivers-- See Fig. 4 attached.

B: Recommended typical solenoid response time for operation at 36 VDC:

1 Millisec Maximum on-time

(See Fig. 5 for typical response curves)

Maximum solenoid operating temperature: 62^{0} C

(Refer to Fig. 6 for thermal response and duty cycle curves)

Average power dissipated by 7 solenoids: 11 watts printing text at 110 characters per second, printing 50% of total time, 40 characters per second thru-put, 36 VDC solenoid supply.

6. MAINTENANCE:

6.1 Paper Loading:

Paper loading is facilitated by a snap-in paper roll (see Fig. 8 for paper path). As a result of the straight paper path the DMTP-6 will also feed and print on fanfold paper, multiple copy form sets or labels varying in thickness between 3 and 16 mils without platen adjustment. For fanfold or label printing, the larger rolls or packs have to be outboarded.

6.2 Inking:

An inked ribbon is provided with each printer shipped with the optional ribbon mechanism. This mechanism is motor driven, an input terminal on the rear connector is provided which allows the user to run the ribbon advance motor at will from a 5V logic source (10 ma min.). It is recommended that the ribbon be advanced for the entire length of time the Print head is travelling (FWD + REV). Upon exhaustion of the ribbon supply on one spool an automatic mechanical reversal begins a rewind in the opposite direction. The ribbon is inked by porous re-inking rollers when the mechanism is in motion and travels on a skew to distribute wear. The ribbon spools should be interchanged after approximately 5*million characters thereby exposing a fresh ribbon surface for printing. After an additional 5 million characters both the ribbon and re-inking rollers

should be replaced. Exhaustion of the ink supply will reduce the life of the ribbon. (Wet ribbons resist deformation and tearing).

*The ink is oil based with a shelf life of approximately 1 year if the wrapping material seal is maintained. The number of characters obtainable on a given ribbon surface is dependent upon the age of the ribbon. Data given above assumes a fresh ribbon.

7. MODEL NUMBERS & ACCESSORIES:

Series No.	Checking	Size	Ribbon	Advance	Advance Controls
DMTP-6	X	X	X	X	X
	2	2 3 7/16" 4 6" 5 8 1/2"	1 no ribbon 2 ribbon	1 ratchet .166" 2 (ratchet .215") 3 (ratchet 4mm) 4 (ratchet 5mm) 5 (motor .166") 6 motor .215" 7 (stepper)	1 no controls 2 controls

(NON-STANDARD AVAILABLE IN QUANTITY ONLY - CONSULT FACTORY FOR DETAILS)

Example of order code: DMTP-6 to print on 3 7/16" paper roll with ribbon mechanism, standard ratchet advance (.166" - 6 line/inch) but less advance controls.
Model No. DMTP-6-22211

ACCESSORIES

Paper Rolls:

TYPE	WIDTH	LENGTH	PACKAGING	PART NO.
Standard	3 7/16"	165'	50 Rolls/Ctn.	61-1
Pressure Sensitive	3 7/16"	175'	50 Rolls/Ctn.	61A-1
Standard	6"	240'	24 Rolls/Ctn.	62-1
Pressure Sensitive	6"	185'	25 Rolls/Ctn.	62A-1
Standard	8 1/2"	123'	40 Rolls/Ctn.	63-1
Pressure Sensitive	8 1/2"	185'	25 Rolls/Ctn.	63A-1

NOTE: All dimensions are approximate.

Ribbon: Twin Spool, Black - 18 yds.	P/N B11-70103
Inking Rollers: Black	P/N A11-70102
Inking Kit: Contains 3 replacement ribbons & 6 re-inking rollers	P/N 90-1

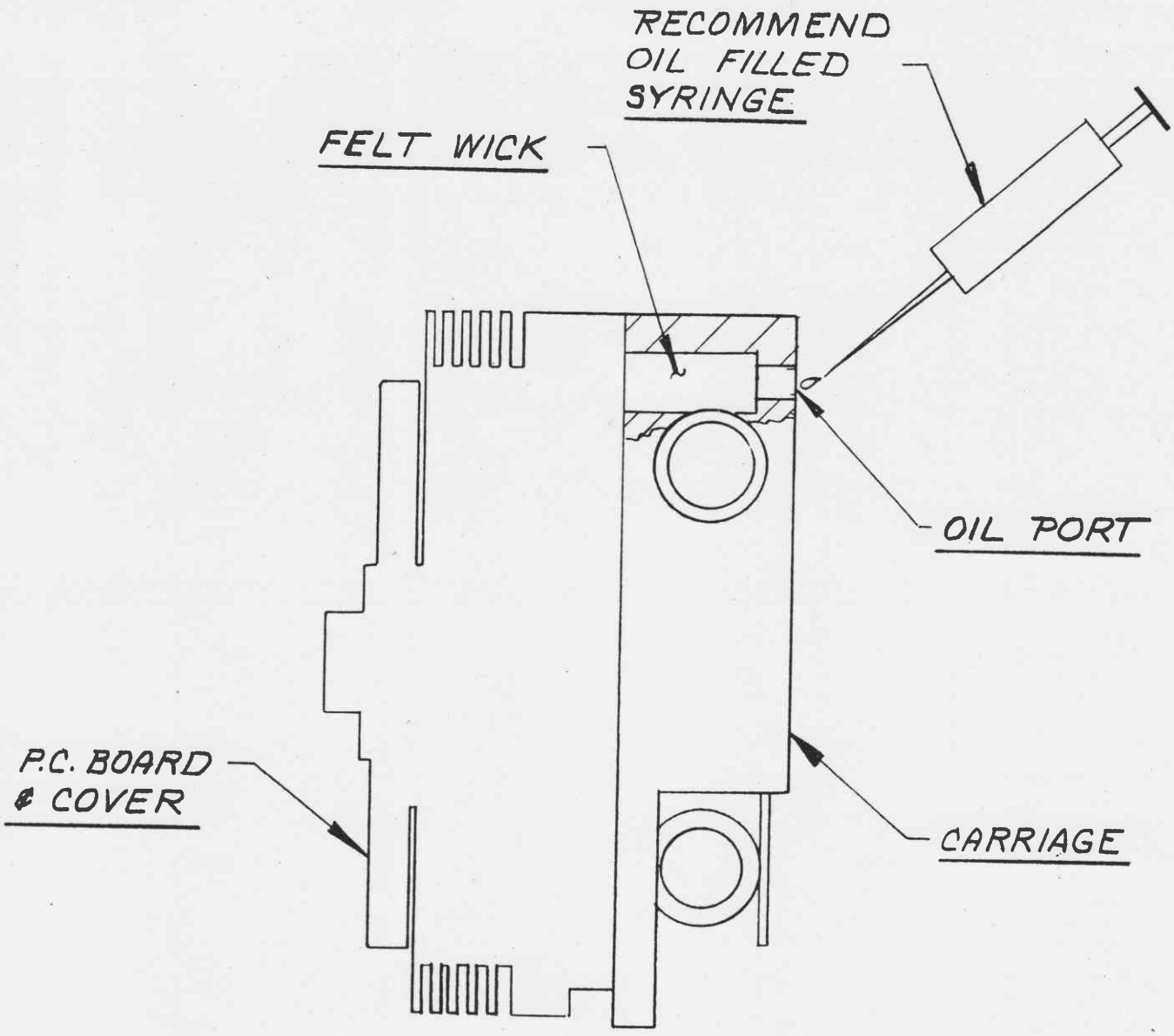

6.3 LUBRICATION:

The head carriage contains a cavity with an oiled felt wick; periodic lubrication (approximately 1 million lines) is advised. (NYE 623A Oil recommended.)

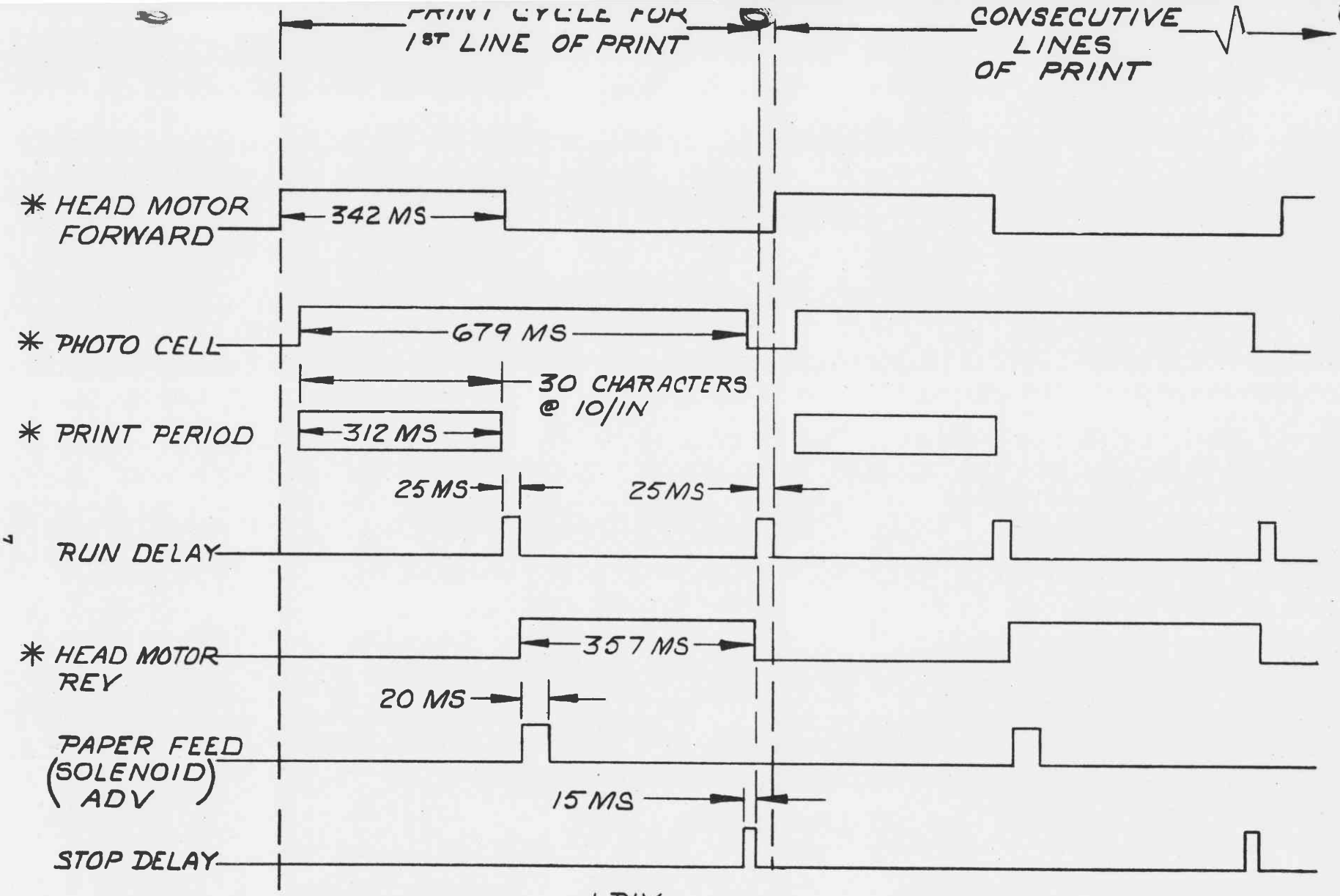

NOTE: 1. SCALE 200 MS

1 DIV
200 MS

2. ACTIVE HIGH

3. TIMING VARIES AS A FUNCTION OF LINE LENGTH

* TYPICAL 60 HZ OPERATION. MULTIPLY TIME BY 6/5 FOR 50HZ OPERATION

FIG. 1

DMTP 6 TIMING (3 7/16 TAPE)

10/76

LINE RATE DATA	
CHARACTER PITCH	t
12.8	.0156
12	.0166
10	.020
8	.025

$$\text{LINE RATE} = (.145 + Nt)^{-1}$$

t = CHARACTER INTERVAL

N = NUMBER OF CHARACTERS PRINTED

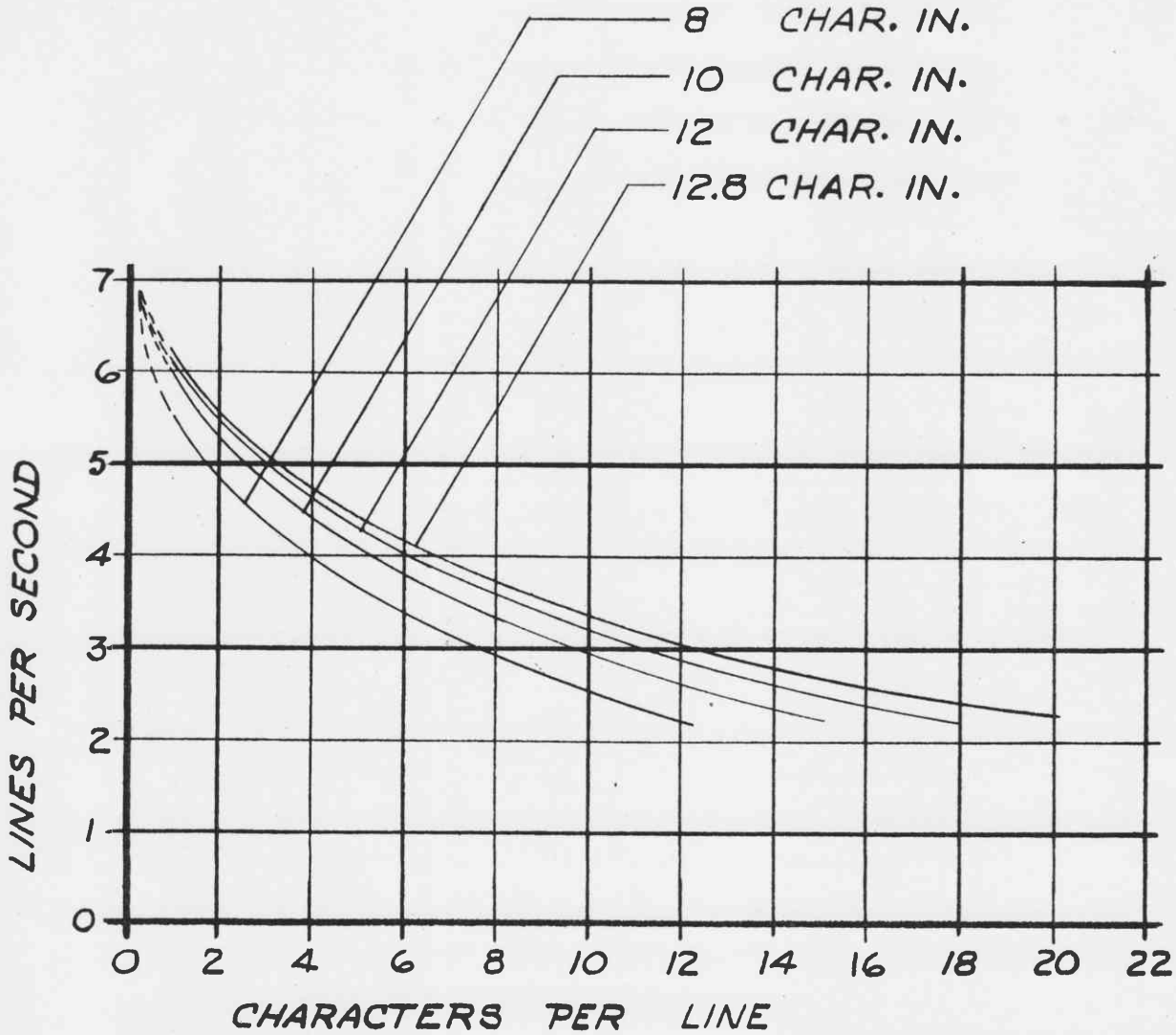

FIG. 2

PRACTICAL AUTOMATION, INC.
SHELTON, CONN.

3 7/[illegible]	4 1/8	6 5/8	4.00
6	6 11/16	9 3/16	6.56
8 1/2	9 3/16	11 11/16	9.06

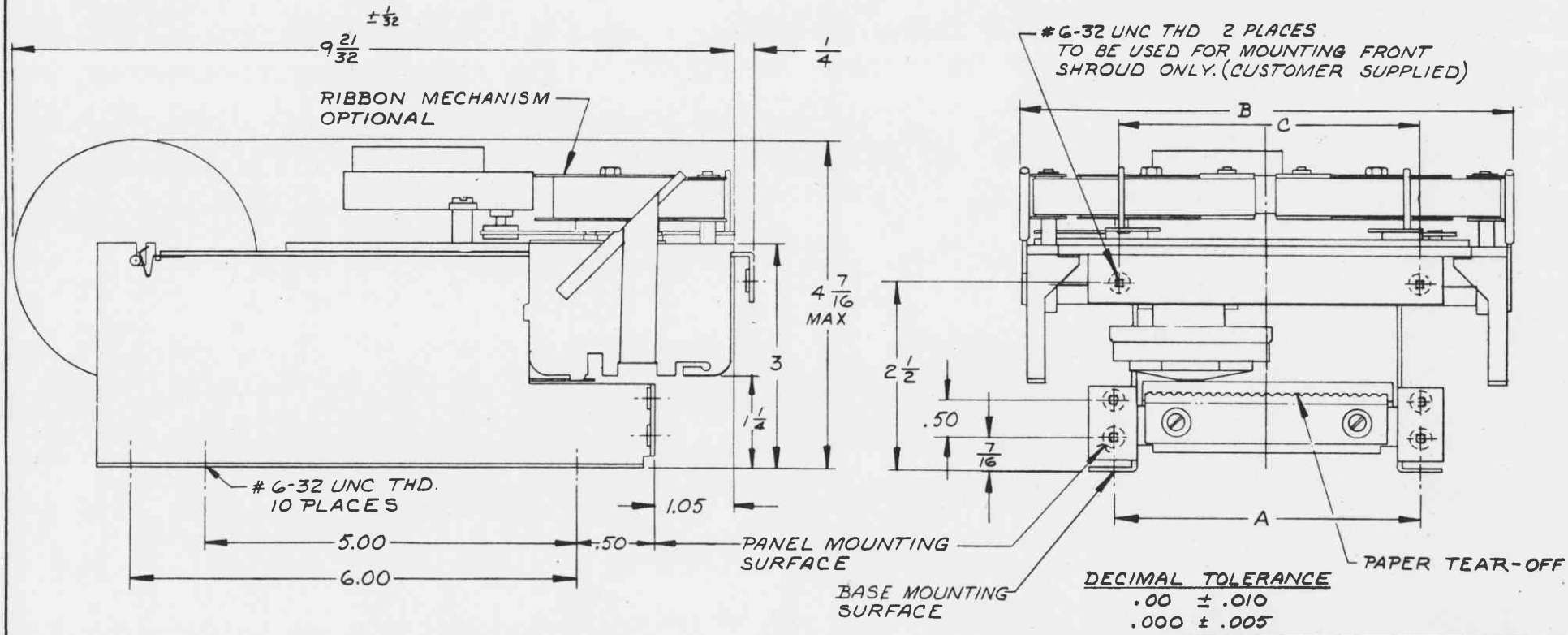

DECIMAL TOLERANCE
.00 ± .010
.000 ± .005

QTY	ITEM	PART NUMBER	NOMENCLATURE
			LIST OF MATERIALS

UNLESS OTHERWISE SPECIFIED: DIMENSIONS ARE IN INCHES TOLERANCES ON: FRACTIONS ± 1/64 DECIMALS ANGLES ± 1°
(—) RMS MICRO INCH ON ALL MACHINED SURFACES
(—) T.I.R. CONCENTRICITY FOR ALL DIAMETERS
REMOVE ALL BURRS AND SHARP CORNERS

DRAWN BY MJ DATE 6-24-76
CHKD BY DATE
APPD BY DATE 9.13.76

PRACTICAL AUTOMATION, INC.
SHELTON, CONN.

MOUNTING DIM'S
DMTP-6 TAPE PRINTER

MATERIAL —— SHEET 1 OF 1
SCALE 1/2
FINISH —— C11-90020

USED ON | NEXT ASS'Y

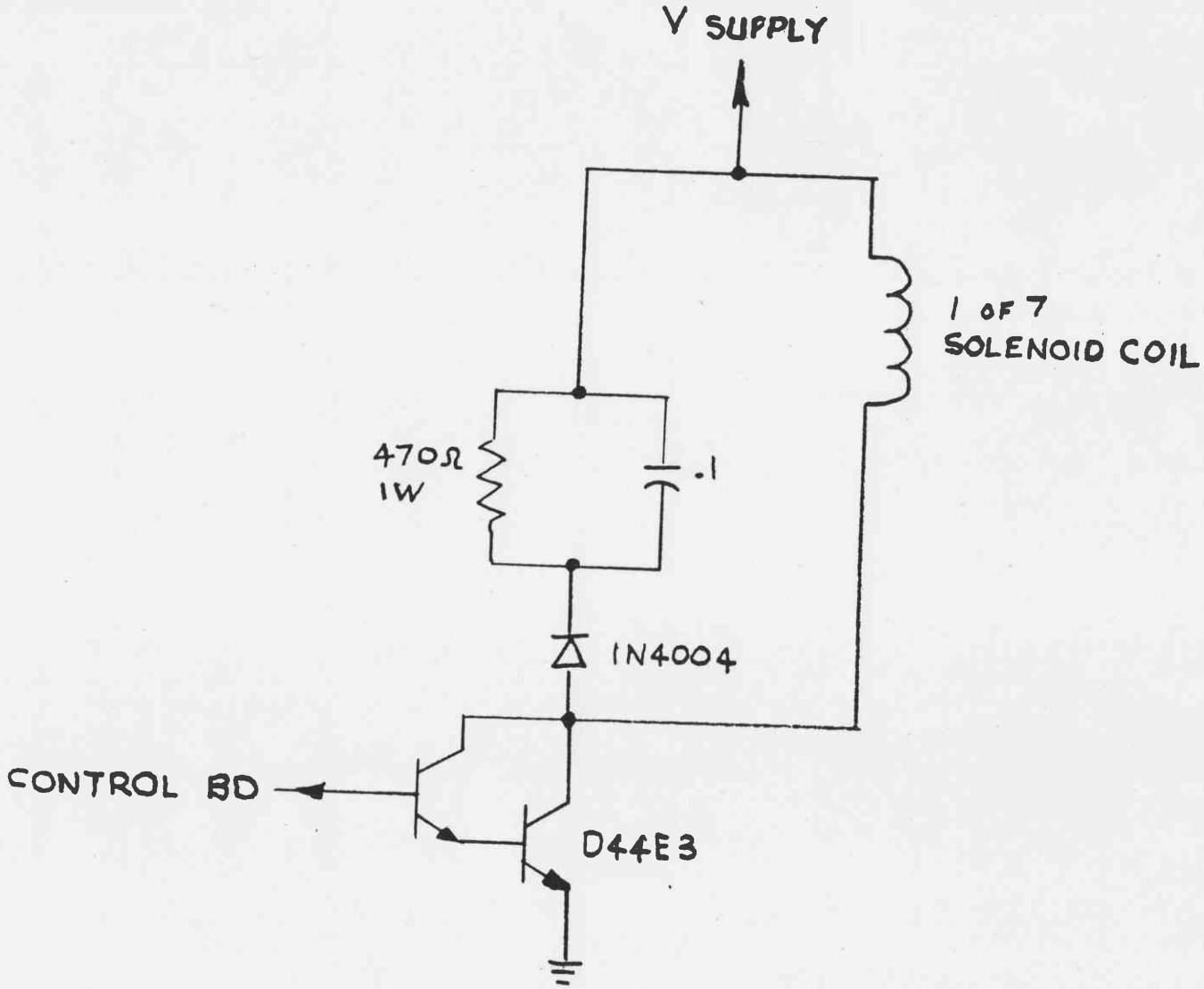

TYPICAL SOLENOID DRIVER
FIG 4

CHAR PER INCH	TOTAL OSCILLATOR CYCLE TIME PER IN.
3	5.55 MS
6	2.77 MS
8	2.08 MS
10	1.66 MS
12	1.38 MS
16	1.04 MS

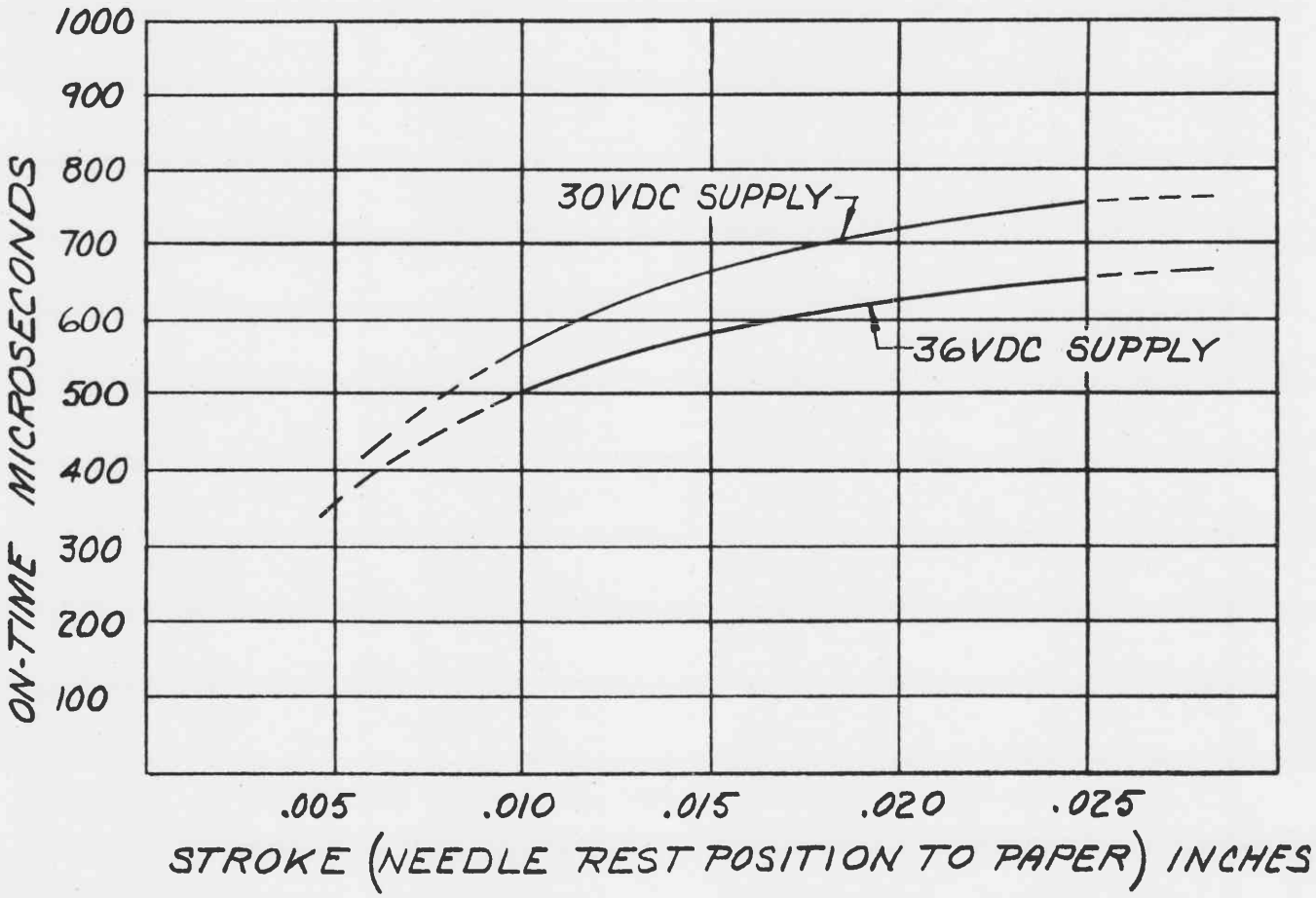

TYPICAL SOLENOID RESPONSE

FIG 5

NOTES: 1. EXTERNAL COOLING FAN MUST BE USED IF SOLENOID TEMP EXCEEDS MAX OPERATING TEMP.

2. AVERAGE INTERNAL TEMP OF COIL

3. POWER SUPPLY AT 36 V

SOLENOID RESPONSE @ 10 IN/SEC

625 μ SEC ON, 1455 μ SEC OFF } 8 CHAR IN

625 μ SEC ON, 1035 μ SEC OFF } 10 CHAR IN

625 μ SEC ON, 755 μ SEC OFF } 12 CHAR IN

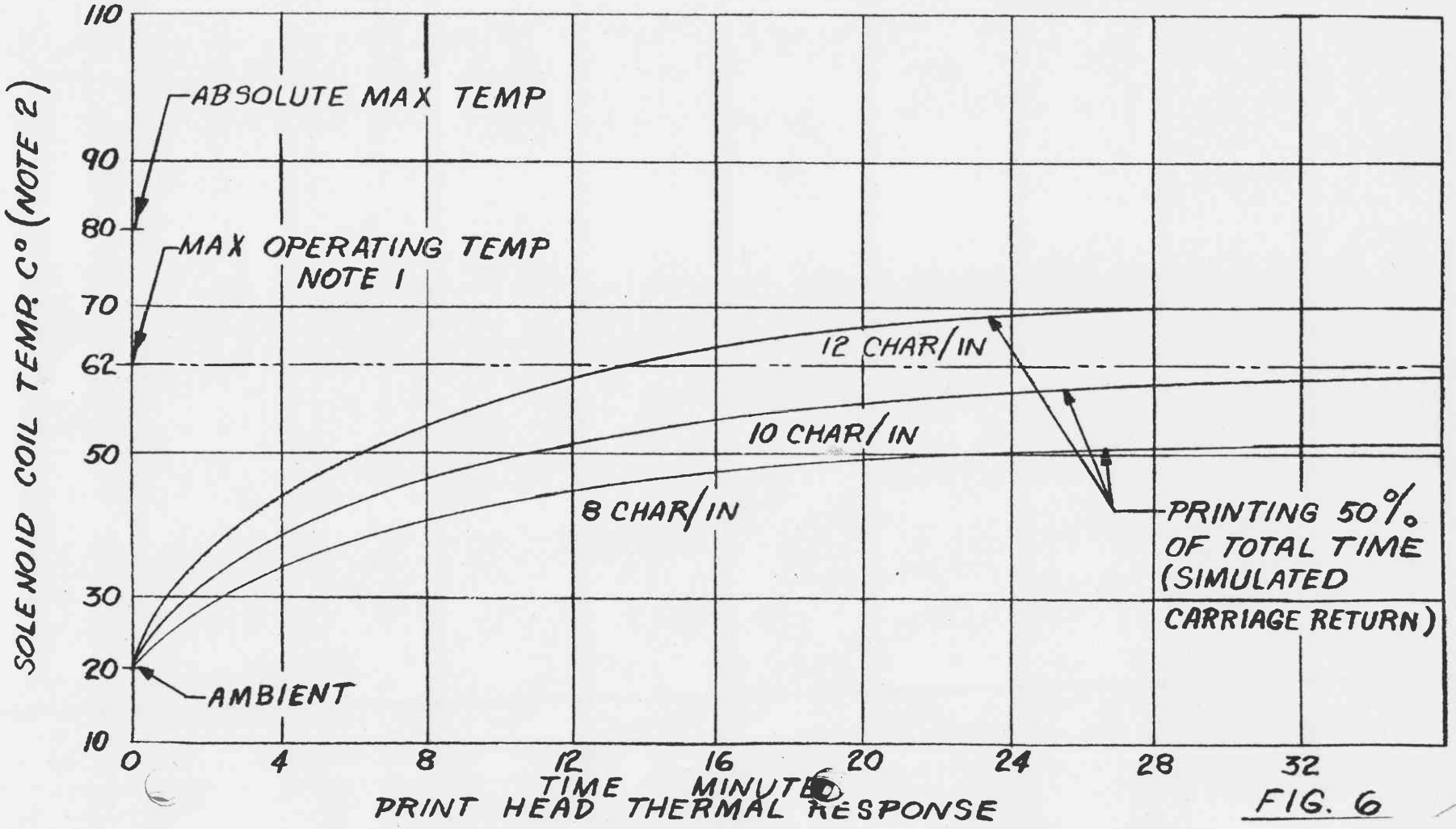

FIG. 6

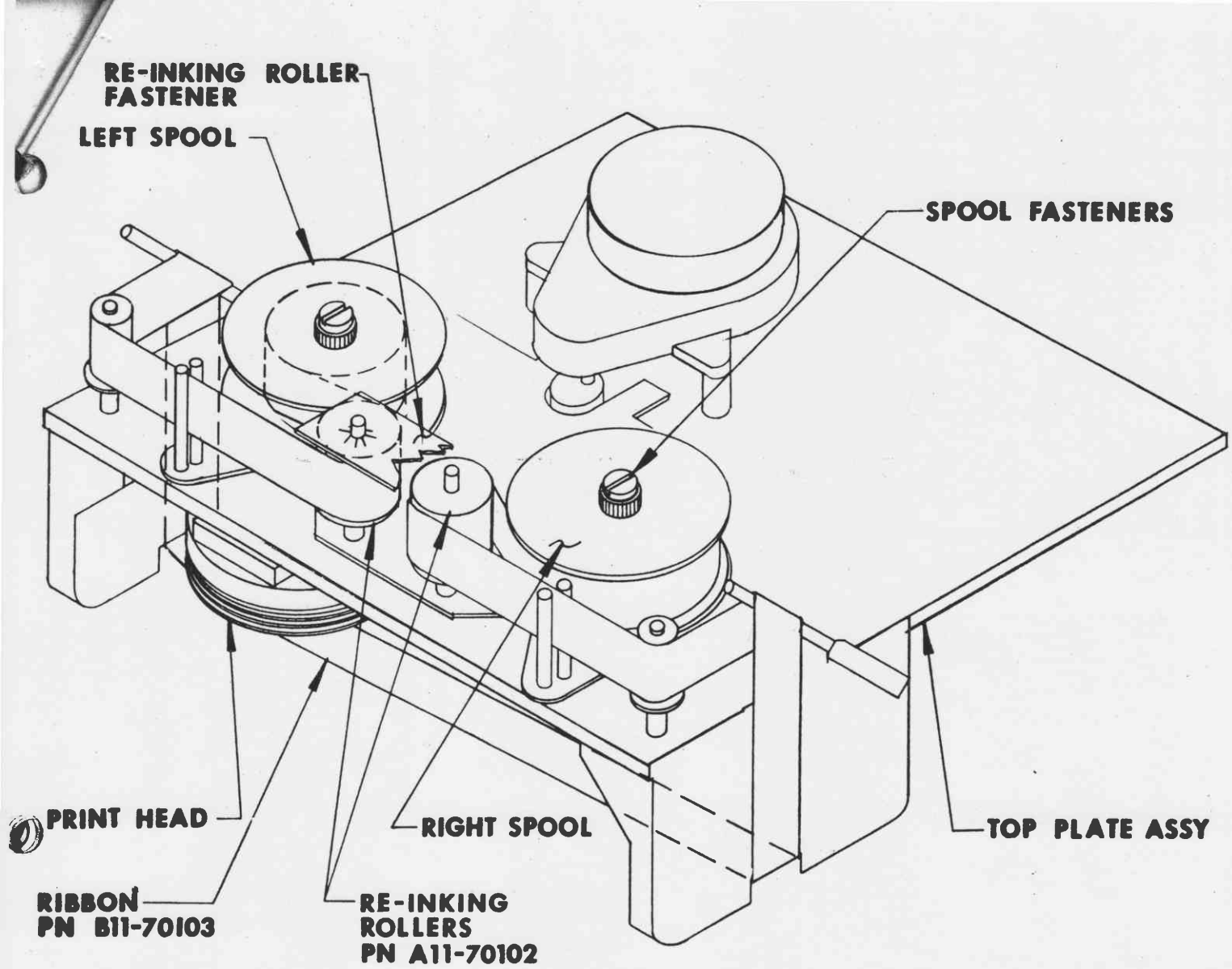

FIGURE 7

RIBBON PATH

Ribbon and Inking Instructions

1. Slip the inking rollers over the posts as depicted above.
2. Hold a ribbon spool in each hand. Allow sufficient slack such that the ribbon can be slipped in the printer throat under the print head and around the top plate ass'y. Thread the ribbon as shown above.
3. Slip the ribbon spools over their respective post (left and right) and re-wind the excessive slack until the ribbon is taut.
4. Install the ribbon spools and inking roller fasteners.
5. After ribbon wear is apparant (excessive billowing) interchange the left and right spools; this will automatically reverse the top and bottom of each spool to preserve the above shown ribbon path and provide a fresh ribbon area for print.
6. Replace inking rollers when ribbon dryness and poor print registration become apparant.

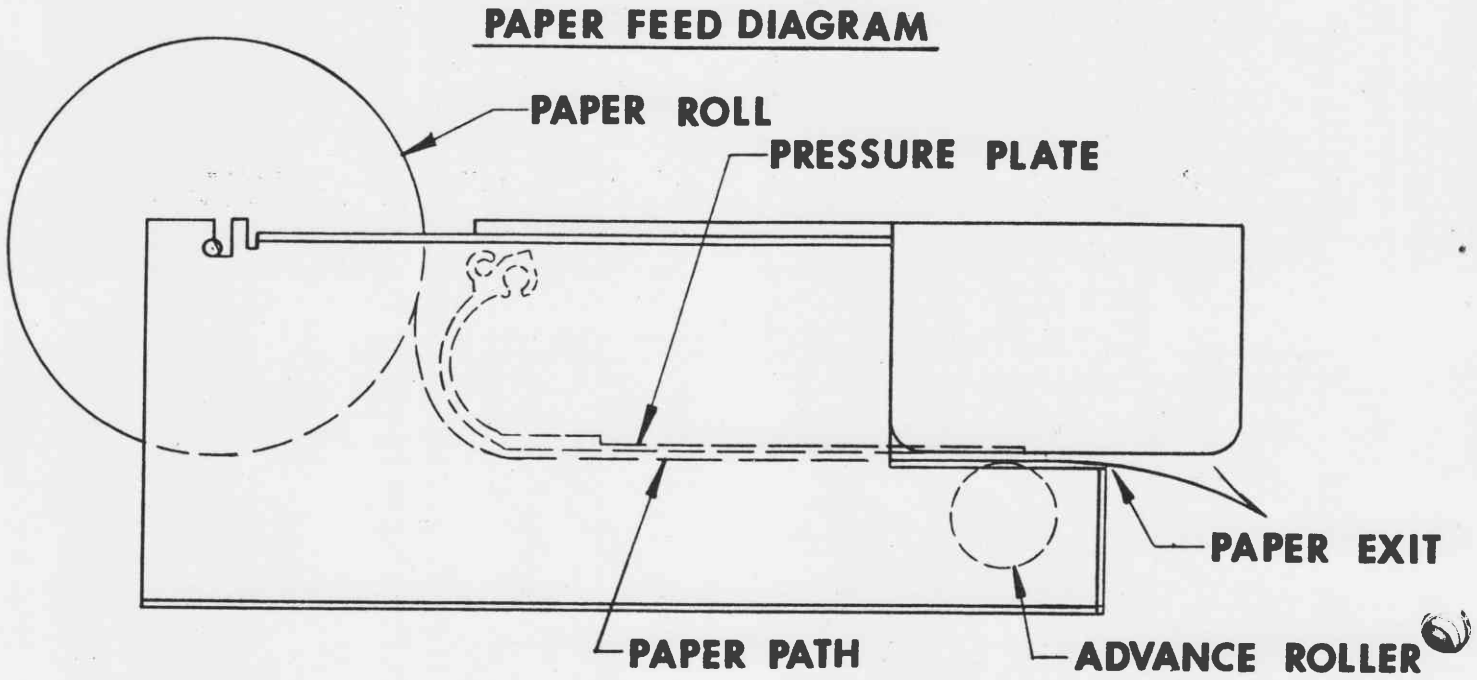

Figure 8

PAPER PATH

1. Prior to paper loading unwind approximately 12" and tear or cut square end.
2. Fold end back and up (approximately 2") making a sharp crease square with edge.
3. Slip folded edge under pressure plate following paper path indicated until contact with advance roller.
4. Electrically actuate roller until paper exits.
5. Snap paper roll spindel firmly in place.

9. WARRANTY:

Practical Automation, Inc., warrants each new Matrix Printer to be free from defects in material and workmanship. Our responsibility is limited to repairing or replacing this instrument, or part thereof, for a period of 90 days after shipment when, in our opinion, the repair or replacement is covered by the warranty. When the instrument is not so covered, we will repair it at standard rates. Under no circumstances should an instrument be returned without factory authorization.

REPAIRS:

Any instrument being returned for repair or replacement must be returned in its enclosure and fully packed with resilient material to isolate it from the sides of the container. Repair costs will be minimized if model and serial numbers as well as a full description of the experienced difficulties are outlined in both the covering repair order and on a tag attached to the instrument itself.

IMPORTANT:

Factory responsibility is void if unit is not returned in its enclosure.

NOTE: All specifications contained within this manual are subject to change without prior notice.

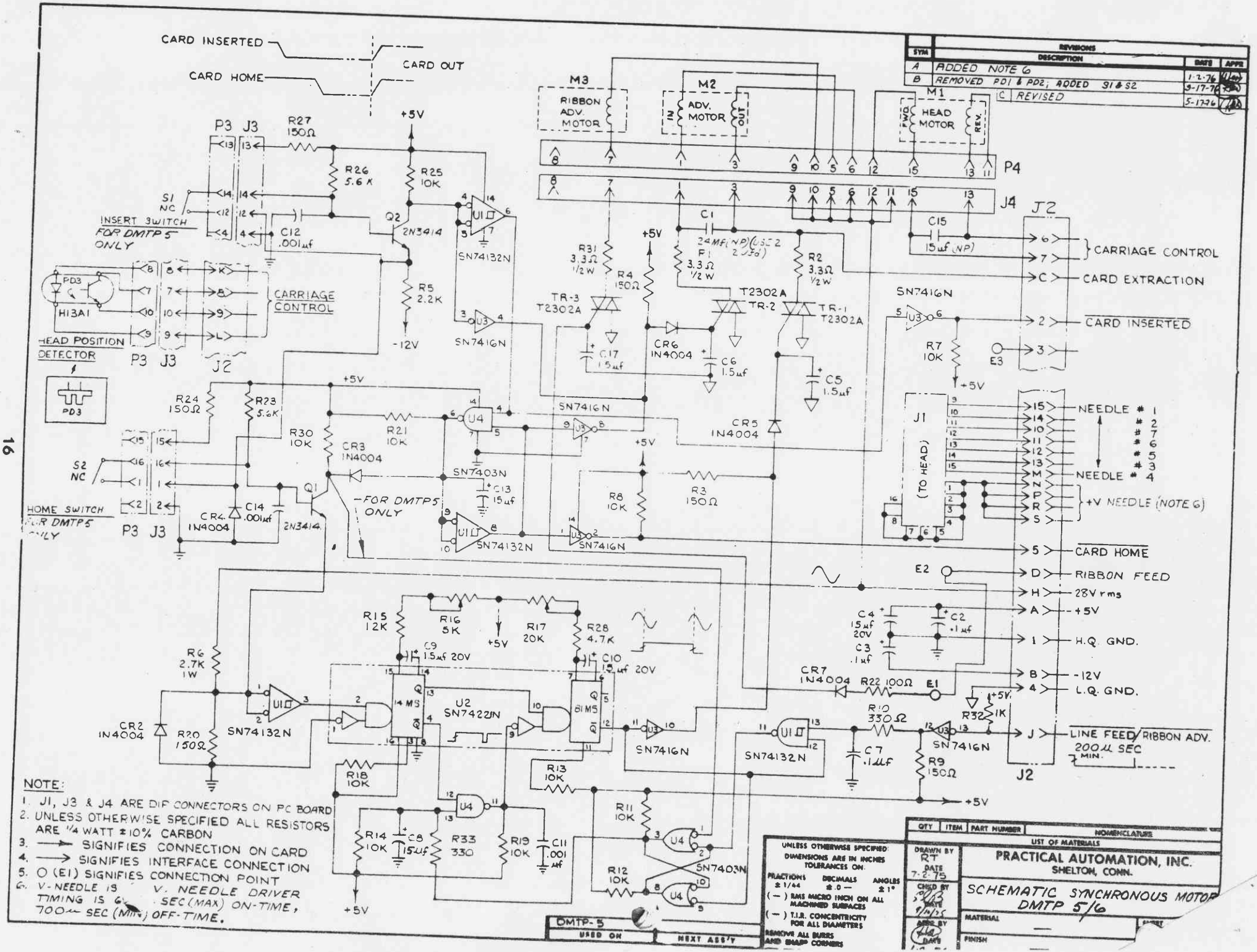
CARD INSERTED
CARD HOME
CARD OUT
M3
RIBBON ADV. MOTOR
M2
ADV. MOTOR
IN
OUT
M1
HEAD MOTOR
FWD
REV.
P4
J4
J2
P3 J3
R27 150Ω
+5V
R26 5.6K
R25 10K
S1 NC
INSERT SWITCH FOR DMTP 5 ONLY
C12 .001µf
Q2 2N3414
U1
SN74132N
R5 2.2K
-12V
U3
SN7416N
PD3
HI3A1
CARRIAGE CONTROL
HEAD POSITION DETECTOR
P3 J3 J2
R31 3.3Ω 1/2 W
R4 150Ω
TR-3 T2302A
C17 1.5µf
C1 .24MF (NP)
F1 3.3Ω 1/2 W
CR6 1N4004
C6 1.5µf
T2302A TR-2
R2 3.3Ω 1/2 W
TR-1 T2302A
C5 1.5µf
C15 .15µf (NP)
SN7416N
R7 10K
E3
CARRIAGE CONTROL
CARD EXTRACTION
CARD INSERTED
R24 150Ω
R23 5.6K
R30 10K
R21 10K
U4
SN7403N
CR3 1N4004
S2 NC
HOME SWITCH FOR DMTP5 ONLY
CR4 1N4004
C14 .001µf
Q1 2N3414
FOR DMTP5 ONLY
C13 .15µf
SN74132N
R8 10K
R3 150Ω
CR5 1N4004
J1 (TO HEAD)
NEEDLE # 1
2
7
6
5
3
NEEDLE # 4
+V NEEDLE (NOTE 6)
CARD HOME
E2
RIBBON FEED
28V rms
+5V
H.Q. GND.
-12V
L.Q. GND.
R15 12K
R16 5K
R17 20K
R28 4.7K
C9 1.5µf 20V
C10 1.5µf 20V
R6 2.7K 1W
CR2 1N4004
R20 150Ω
14 MS
U2 SN7422N
81 MS
C4 15µf 20V
C2 .1µf
C3 .1µf
CR7 1N4004
R22 100Ω
E1
R10 330Ω
R32 1K
LINE FEED/RIBBON ADV. 200µ SEC MIN.
C7 .1µf
R9 150Ω
R18 10K
R13 10K
R11 10K
R14 10K
C8 .15µf
R33 330
R19 10K
C11 .001 µf
R12 10K
NOTE:
1. J1, J3 & J4 ARE DIP CONNECTORS ON PC BOARD
2. UNLESS OTHERWISE SPECIFIED ALL RESISTORS ARE 1/4 WATT ±10% CARBON
3. ⟶ SIGNIFIES CONNECTION ON CARD
4. ⟶ SIGNIFIES INTERFACE CONNECTION
5. O (E1) SIGNIFIES CONNECTION POINT
6. V-NEEDLE IS V. NEEDLE DRIVER TIMING IS 6 SEC (MAX) ON-TIME, 700 SEC (MIN) OFF-TIME.
DMTP-5
USED ON
NEXT ASS'Y
UNLESS OTHERWISE SPECIFIED DIMENSIONS ARE IN INCHES TOLERANCES ON.
FRACTIONS ± 1/64
DECIMALS ± .0
ANGLES ± 1°
(—) RMS MICRO INCH ON ALL MACHINED SURFACES
(—) T.I.R. CONCENTRICITY FOR ALL DIAMETERS
REMOVE ALL BURRS AND SHARP CORNERS
DRAWN BY RT
DATE 7-2-75
CHKD BY
DATE
APPD BY
DATE
QTY ITEM PART NUMBER NOMENCLATURE
LIST OF MATERIALS
PRACTICAL AUTOMATION, INC.
SHELTON, CONN.
SCHEMATIC SYNCHRONOUS MOTOR DMTP 5/6
MATERIAL
FINISH
SYM REVISIONS DESCRIPTION DATE APPR
A ADDED NOTE 6 1-2-76
B REMOVED PD1 & PD2; ADDED S1 & S2 9-17-76
C REVISED 5-17-76

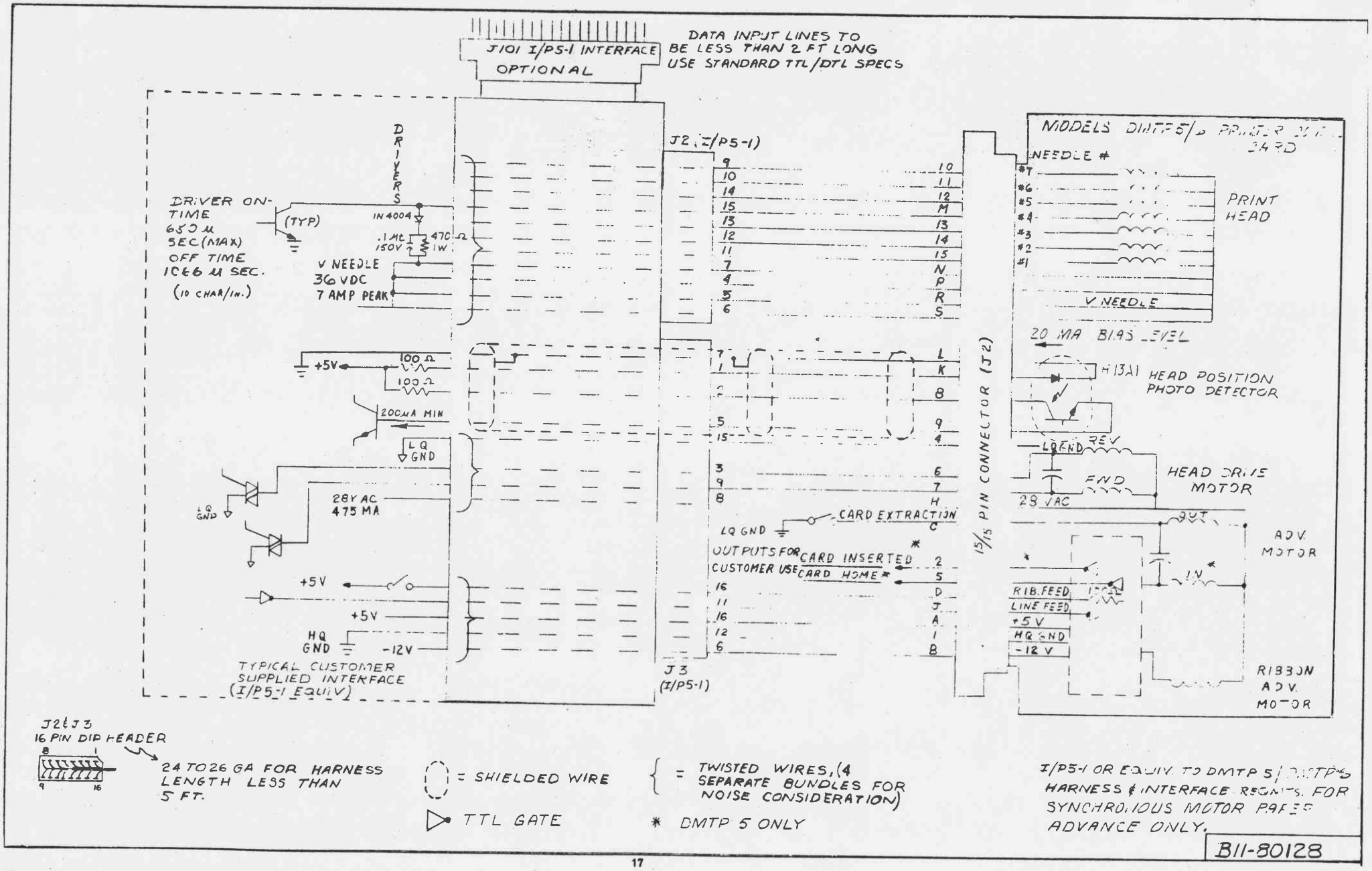
J101 I/P5-1 INTERFACE
OPTIONAL
DATA INPUT LINES TO BE LESS THAN 2 FT LONG USE STANDARD TTL/DTL SPECS
DRIVERS
DRIVER ON-TIME 650 µ SEC (MAX) OFF TIME 1066 µ SEC. (10 CHAR/IN.)
(TYP)
IN4004
.1 Mf 150V
470 Ω 1W
V NEEDLE 36 VDC 7 AMP PEAK
+5V
100 Ω
100 Ω
200 MA MIN
LQ GND
28V AC 475 MA
+5V
+5V
HQ GND
-12V
TYPICAL CUSTOMER SUPPLIED INTERFACE (I/P5-1 EQUIV)
J2 (I/P5-1)
J3 (I/P5-1)
15/15 PIN CONNECTOR (J2)
CARD EXTRACTION
OUTPUTS FOR CUSTOMER USE
CARD INSERTED
CARD HOME *
MODELS DMTP5/6 PRINTER
NEEDLE #
PRINT HEAD
V NEEDLE
20 MA BIAS LEVEL
H13A1 HEAD POSITION PHOTO DETECTOR
LQ END
REV
END
HEAD DRIVE MOTOR
28 VAC
OUT
ADV. MOTOR
RIB. FEED
LINE FEED
+5 V
HQ GND
-12 V
RIBBON ADV. MOTOR
J2 & J3
16 PIN DIP HEADER
24 TO 26 GA FOR HARNESS LENGTH LESS THAN 5 FT.
= SHIELDED WIRE
= TWISTED WIRES, (4 SEPARATE BUNDLES FOR NOISE CONSIDERATION)
TTL GATE
* DMTP 5 ONLY
I/P5-1 OR EQUIV. TO DMTP 5/6 HARNESS & INTERFACE REQ'MTS. FOR SYNCHRONOUS MOTOR PAPER ADVANCE ONLY.
B11-80128

This application note specifically describes the operation of Practical Automation's Basic Serial Interface I/P 3-1 but also serves to describe, in general, the adaptation of all Matri-Dot Series printers to similiar interfaces.

Fig. 1

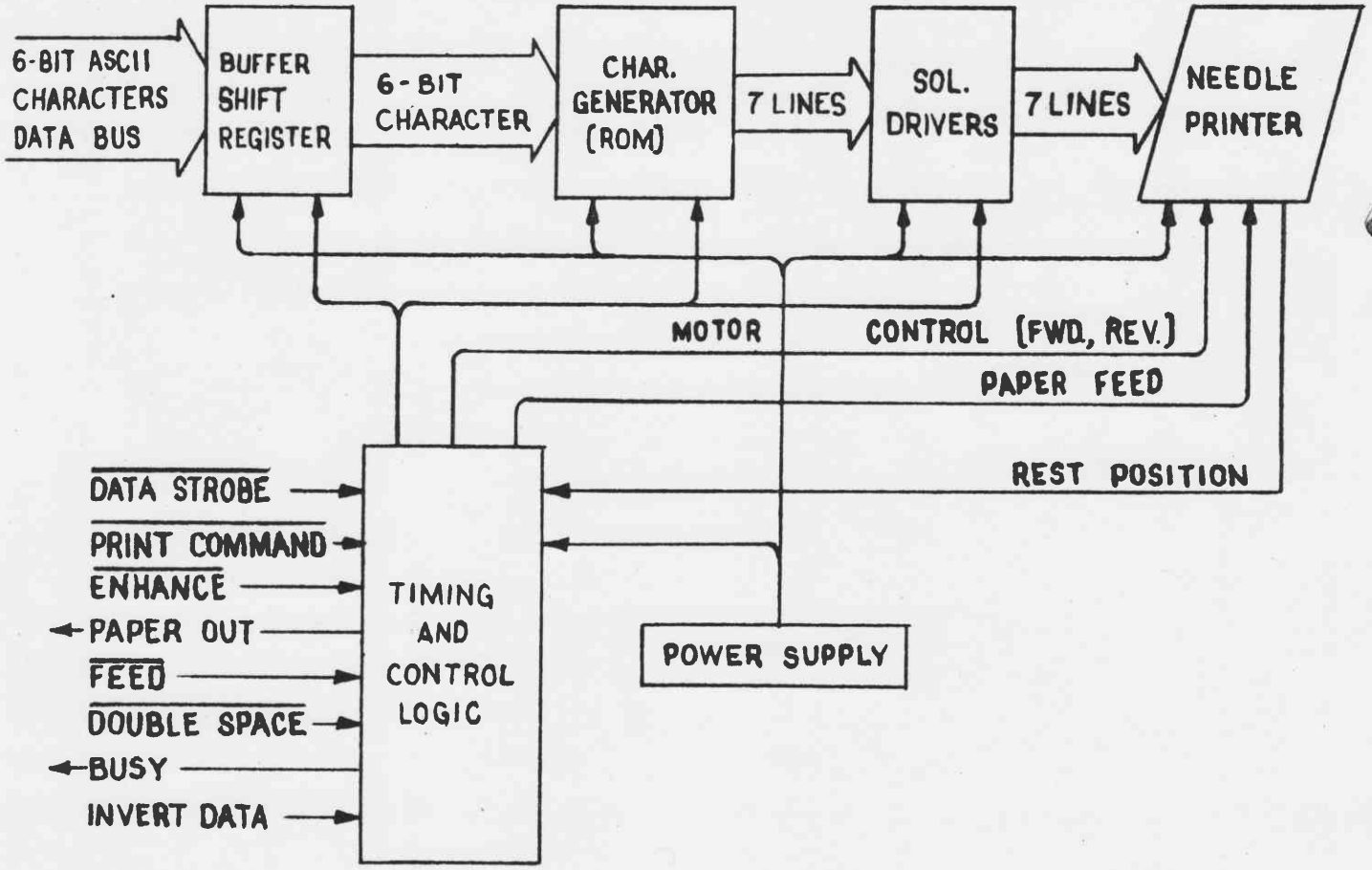

I/P 3-1 Basic Serial Control
(Bit Parallel, Character Serial)

The Basic Serial Interface Diagram (Fig. 1) serves to illustrate the flow of data, as well as the organization of printer timing and control logic. Basic Serial, as used

(Continued on Back Page)

Fig. 2

TIMING DIAGRAM I/P 3-1

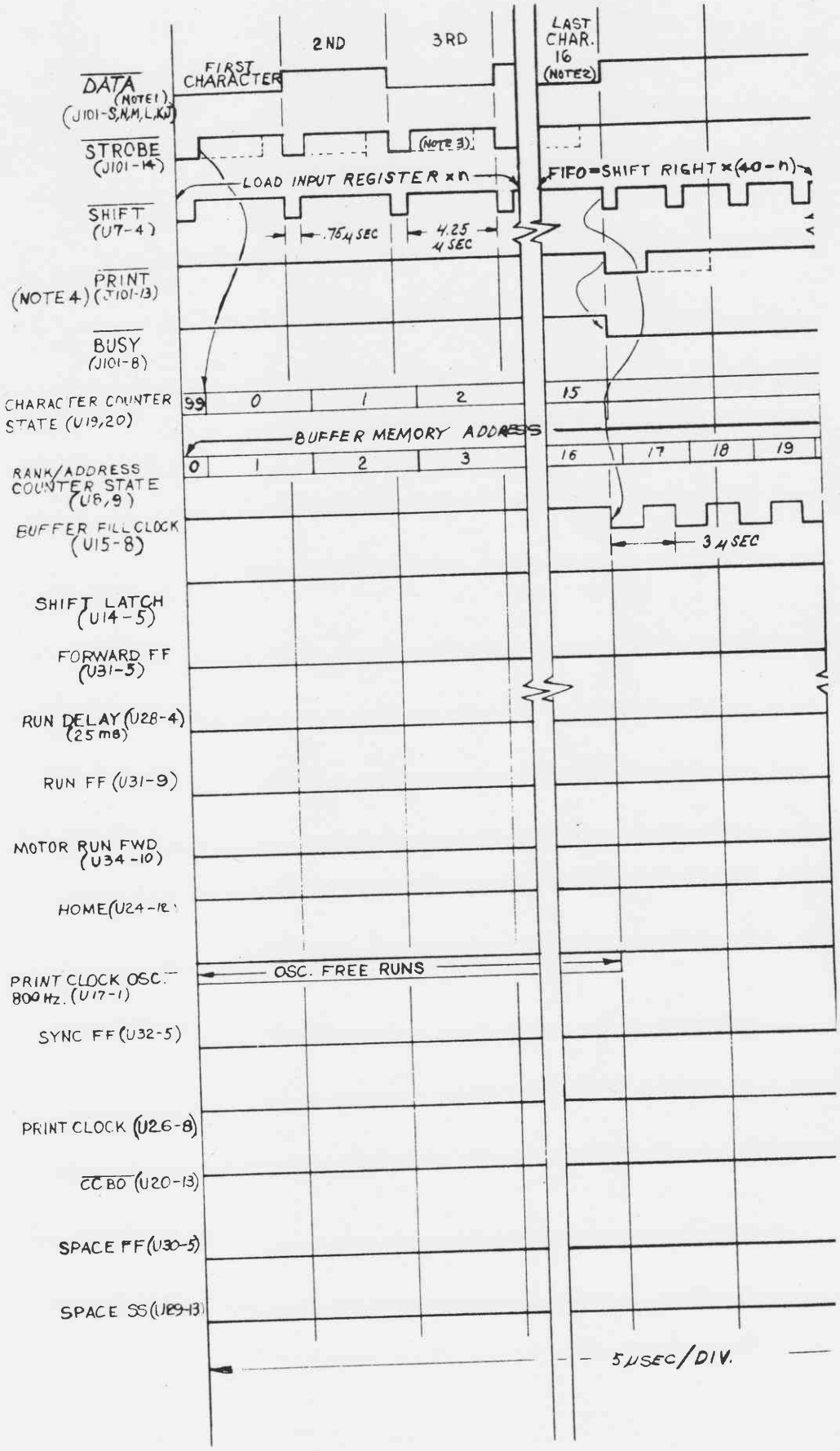

NOTES: 1. J101 is customer interface connector

2. "Last character" does not equal buffer capacity (Line length)
   a) Model DMTP-3, 3A Max. Line Length is 18 characters
   b) Model DMTP-4 Max. Line Length is 30 characters
   c) Model DMTP-5 Max. Line Length is 25 characters

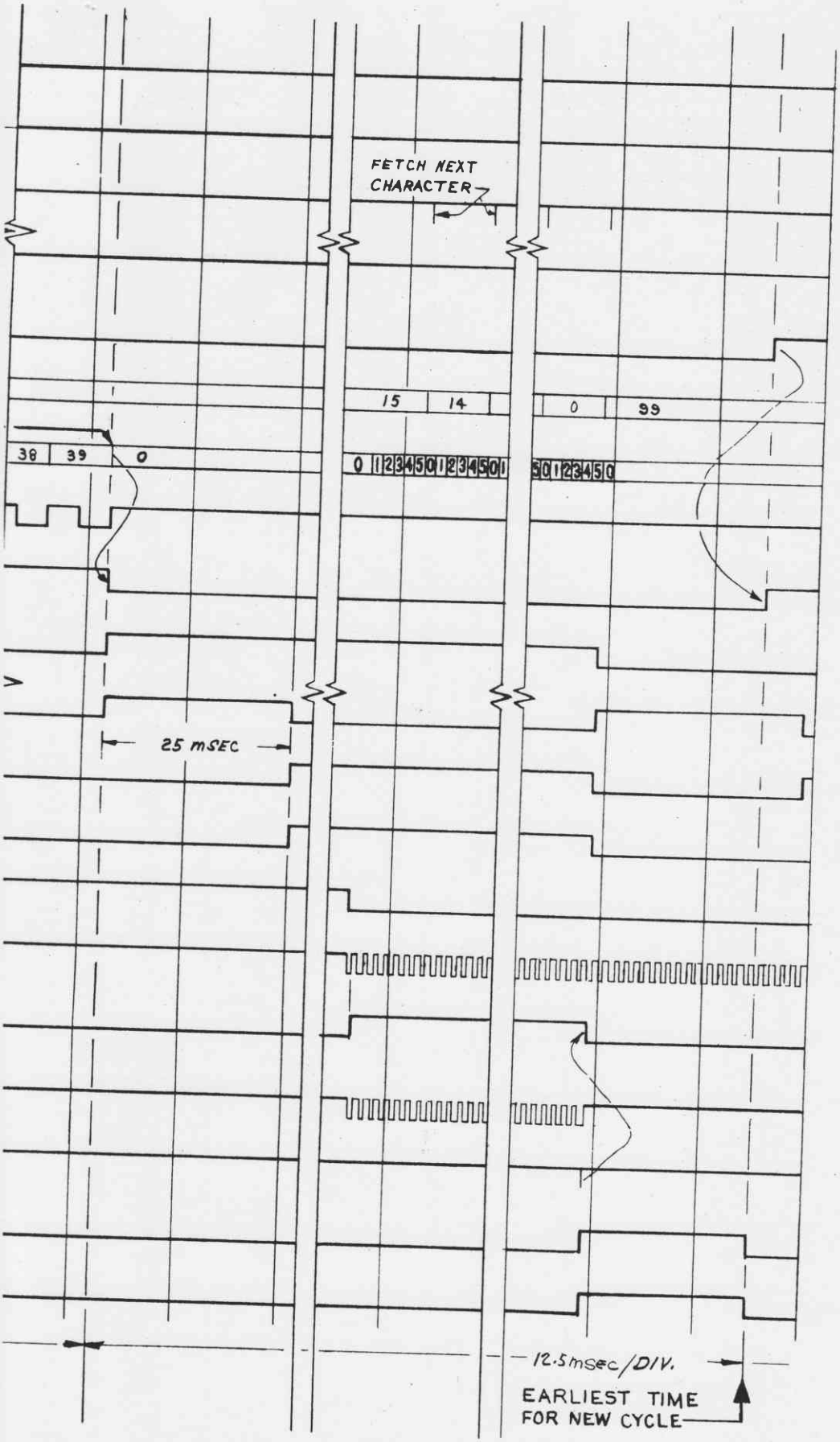

3. Leading edge triggers buffer loading

4. Remote Print Command required if less than full line is printed; (Print is automatic upon filling buffer)

5. Request Dwg. E11-80042 for I/P 3-1 schematic

here, is the term given to input information that is organized in bit-parallel, character-serial format; coding is standard USASCII 6 bit sub-set. Six lines, used to input information to the printer, are collectively designated Data Bus.

Information is loaded, one character at a time, into a buffer shift register by applying a Strobe pulse coincident with each character's presence on the Data Bus. Most mini-computers are designed with 8 bit (byte) Data Bus output and are easily interfaced with standard Practical Automation Matri-Dot printers. Bit assignment is, typically, 6 data bits, one strobe bit, and one print command bit. Print command is automatic upon reaching line capacity; however, the command can be initiated from a remote source after one or more characters have been loaded.

A Busy signal is issued by the printer in response to the Print Command. The Busy signal serves as an acknowledgment of the print command and inhibits further access to the input register until the end of line is reached. Busy signal is dropped at the conclusion of the print cycle, which occurs at the end of the paper feed interval.

Coincident with the Busy signal, the motor control circuit drives the print head "forward" across the page. A photo-sensor detects the start of line point, triggering an iterative cycle in which the input register supplies an address to the Character Generator. But that location contains 5 coded words corresponding to the 5 vertical ranks of a matrix character. As the print head sweeps across the page, the ranks are sampled and the coded words used to "fire" the needle solenoid drivers. A new character is shifted-out after the fifth rank has been sampled; the character formation process is repeated until the last stored character has been printed. The motor control circuit drives the print head back to its "rest" position after the input register has been unloaded.

Other remote control inputs are provided to obtain Enhanced Printing, Line Feed, and Double Space operation. Character Enhance enables the user to produce a bold-face character. Activation of this logic input causes each vertical rank of needles to strike twice, producing a character twice as wide as a standard character. This mode reduces the maximum line length of the printer by half.

Feed and Double Space are logic inputs to control the paper advance mechanism for single line or double line spacing respectively.

Specifications subject to change without notice.

Printed in U.S.A.